ENGINEER'S Mini Notebook

62-5033

RadioShack®

Science and Communication Circuits and Projects

Build projects to detect:

- Rain drops
- Temperature
- Earthquakes
- Haze
- Pressure
- Solar radiation
- Motion
- Light
- And more

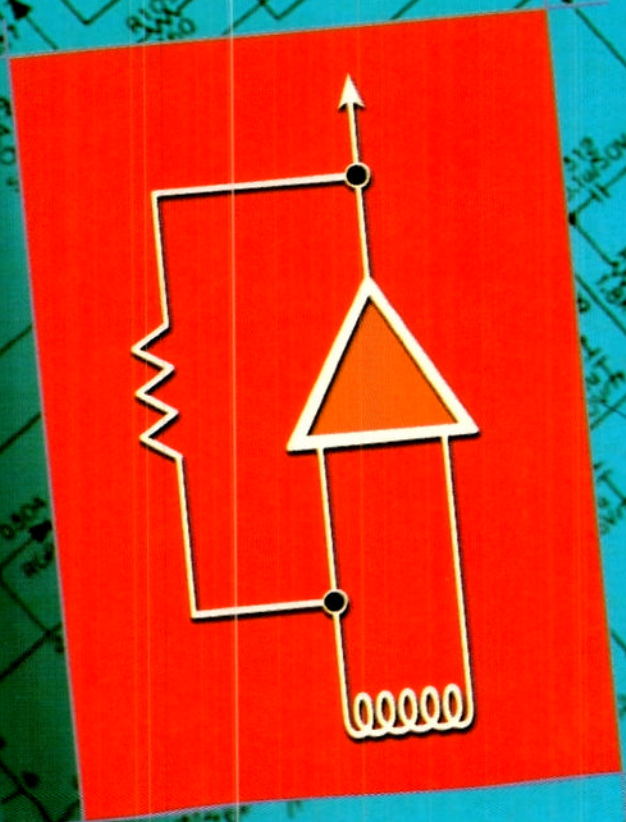

Forrest M. Mims III

CIRCUIT SYMBOLS

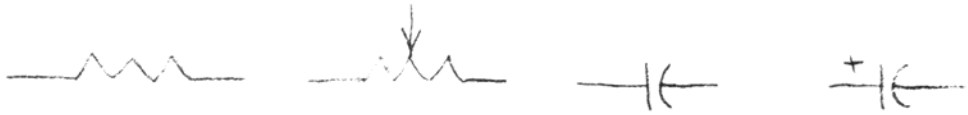

FIXED RESISTOR | VARIABLE RESISTOR | FIXED CAPACITOR | POLARIZED CAPACITOR

RECTIFIER/ DIODE | ZENER DIODE | PNP TRANSISTOR | NPN TRANSISTOR

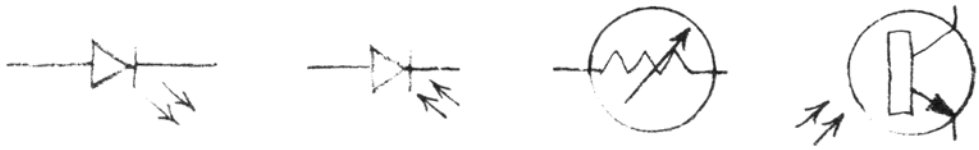

LED | SOLAR CELL | PHOTO-RESISTOR | PHOTO-TRANSISTOR

CONNECTED WIRES | UNCONNECTED WIRES | POSITIVE SUPPLY | GROUND

SPST SWITCH | SPDT SWITCH | NORMALLY OPEN PUSHBUTTON | NORMALLY CLOSED PUSHBUTTON

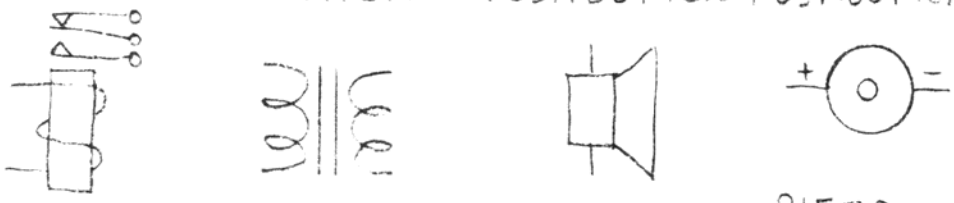

RELAY | TRANSFORMER | SPEAKER | PIEZO-SPEAKER

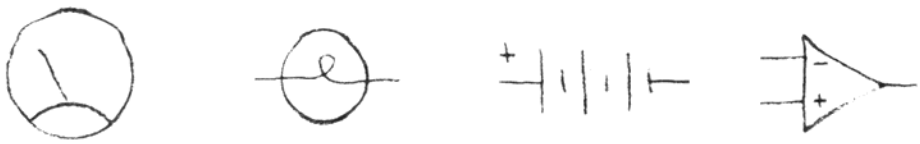

METER | LAMP | BATTERY | OP-AMP

ENGINEER'S MINI-NOTEBOOK COLLECTION

ELECTRONIC SENSOR CIRCUITS & PROJECTS

BY

FORREST M. MIMS III

FIRST PRINTING - 2000

COPYRIGHT ©1996, 1998-2000 BY FORREST M. MIMS III
ALL RIGHTS RESERVED

PRINTED IN THE UNITED STATES OF AMERICA

ABOUT THE ENGINEER'S MINI-NOTEBOOK COLLECTION

EACH BOOK IN THIS COLLECTION INCLUDES THREE OR FOUR ENGINEER'S MINI-NOTEBOOKS. EACH BOOK INCLUDES BOTH STANDARD CIRCUITS AND CIRCUITS DESIGNED BY FORREST M. MIMS III. EACH CIRCUIT WAS BUILT AND TESTED AT LEAST TWICE. THE CIRCUITS WERE ALSO BUILT FROM THE FINAL BOOK TO FIND ERRORS.

VARIATIONS IN COMPONENTS AND CONSTRUCTION METHODS MAY CAUSE YOUR RESULTS TO DIFFER FROM THOSE DESCRIBED HERE. THEREFORE THE AUTHOR AND RADIOSHACK ARE NOT RESPONSIBLE FOR THE SUITABILITY OF THE CIRCUITS FOR ANY APPLICATION. FOR EXAMPLE, THE CIRCUITS IN THIS BOOK SHOULD NOT BE USED FOR MEDICAL APPLICATIONS, SAFETY DEVICES, TRAFFIC CONTROLLERS OR ANY OTHER USE THAT MIGHT SOMEHOW RESULT IN DAMAGE TO PROPERTY OR INJURY TO YOU OR OTHERS. IT IS YOUR RESPONSIBILITY TO DETERMINE IF COMMERCIAL USE, SALE OR MANUFACTURE OF ANY DEVICE BASED ON INFORMATION IN THIS BOOK INFRINGES ANY PATENT, COPYRIGHT OR OTHER RIGHT.

FOR MORE INFORMATION

DUE TO THE MANY INQUIRIES RECEIVED BY THE AUTHOR AND RADIOSHACK, IT IS NOT POSSIBLE TO PROVIDE CUSTOM CIRCUIT DESIGNS AND TECHNICAL ADVICE. YOU CAN LEARN MORE ABOUT ELECTRONICS FROM OTHER BOOKS AVAILABLE FROM RADIOSHACK AND FROM RADIOSHACK LAB KITS. ELECTRONICS MAGAZINES ARE ALSO A GOOD SOURCE OF INFORMATION. VARIOUS ELECTRONICS SITES ON THE INTERNET AND WORLD WIDE WEB ARE ALSO VERY HELPFUL.

I. SENSOR PROJECTS 9

OVERVIEW 9
DESIGN TIPS 9

ELECTRONIC SENSORS 10
GO-NO GO SENSORS 10
ANALOG SENSORS 11

BASIC SENSOR CIRCUITS 12

SENSORS AND COMPUTERS 13

TOUCH SWITCHES 14
MULTI-LAYER SWITCH 14
TACTILE FEEDBACK SWITCH 14
WHISKER-STYLE LEVER SWITCH 15

PUFF SWITCH 16

PAPER CLIP SWITCH 17

PHONE PLUG SWITCH 17

TILT SWITCH 17

MUSIC WIRE VIBRATION SENSOR 18

PIEZOELECTRIC VIBRATION SENSOR 19

PENDULUM SWITCH 20

PENDULUM QUADRANT SWITCH 21

SWITCH-TYPE ALARM SYSTEMS 22
OPEN-CIRCUIT ALARMS 22-23
CLOSED-CIRCUIT ALARM 23
INTELLIGENT SECURITY ALARM 24-25

FIRE OR WATER SENSOR 26

PULL SWITCH 27

VOLTAGE SENSORS 28-29
ANALOG PRESSURE SENSOR 30-31
PRESSURE-TO-VOLTAGE SENSOR 31
STRAIN SENSORS 32
STRAIN SENSOR APPLICATIONS 33
STRAIN SENSOR DESIGNS 33
STRAIN SENSOR RELAY 34
STRAIN SENSOR TONE GENERATOR 34
STRAIN SENSOR AMPLIFIER 35
MAGNETIC FIELD SENSOR 36
MAGNETIC FIELD SWITCH 37
MAGNETIC FIELD AMPLIFIER 37
VIDEO MONITOR SENSORS 38
VIDEO MONITOR TONE GENERATOR 39
VIDEO MONITOR RELAY CIRCUITS 40-41
VIDEO MONITOR SENSOR PROGRAMS 42-43
LIGHTNING SENSOR 44-45
INFRARED SENSOR 46
INFRARED SWITCH 46
INFRARED AMPLIFIER 47
POLARIZED LIGHT 48
POLARIZED LIGHT SENSOR 49
INTEGRATED LIGHT SENSORS 50
LIGHT-TO-TONE SENSOR 50
IR REMOTE CONTROL SENSOR 51
LIGHT ACTIVATED RELAY 51
OPTICAL LEVEL SENSORS 52
VARIABLE TONE LEVEL SENSOR 52
SWITCHED TONE LEVEL SENSOR 52

II. MAGNET SENSOR PROJECTS

OVERVIEW 53
MAGNETITE 53
MAGNETIC FIELDS 54
MAGNETIC POLES 54
MAGNETIC FIELD INTENSITY 55
EARTH'S MAGNETIC FIELD 55
EARTH'S GEOGRAPHIC POLES 56
EARTH'S MAGNETIC POLES 56
LIVING MAGNETS 57
MAGNETIC BACTERIA 57
APPLICATIONS FOR MAGNETS 58
MAGNET CONFIGURATIONS 59
TEMPORARY MAGNETS 60
PERMANENT MAGNETS 60
USING AND CARING FOR MAGNETS 61
THE COMPASS 62
MAPPING A MAGNETIC FIELD 63
ELECTROMAGNET 64
SOLENOID 64
ELECTROMAGNETIC RELAY 65
RELAY DRIVER 65
MAGNET SWITCHES 66
MAGNETIC SWITCH INTERFACE 67
MAGNETIC-ACTUATED TONE 67
THE HALL EFFECT 68
APPLICATIONS FOR HALL SENSORS 69
HALL SENSOR BASICS 70
BASIC HALL SENSOR 70
BASIC HALL SENSOR CIRCUIT 70
HALL SENSOR OUTPUT VOLTAGE 71
HALL SENSOR + LOGIC CIRCUIT 72

INTEGRATED DIGITAL HALL SENSOR 72
HALL SENSOR + AMPLIFIER 73
INTEGRATED LINEAR HALL SENSOR 73
HALL SENSOR SPECIFICATIONS 74
BASIC GAUSS METER 74
POWER HALL SENSOR 75
HALL LAMP DRIVER 75

HALL SENSOR OPERATING TIPS 76
HALL SENSOR MAGNET SEPARATION 77
FLUX CONCENTRATORS 77
BEST MAGNET ARRANGEMENTS 78
HEAD-ON OPERATION 78
SLIDE-BY OPERATION 78
PUSH-PUSH OPERATION 79
PUSH-PULL OPERATION 79

INTERFACING DIGITAL SENSORS 80
LED INTERFACE 80
TRANSISTOR INTERFACE 80
TTL LOGIC INTERFACE 81
CMOS LOGIC INTERFACE 81

APPLICATION CIRCUITS
FERROUS METAL INDICATOR 82
HALL SENSOR RELAY 83
LEVEL INDICATOR 84
MAGNET POSITION DETECTOR 85
DUAL-OUTPUT HALL SENSORS 86
FIELD STRENGTH BARGRAPH 87
HALL SENSOR DIRECTION INDICATOR 88
ULTRA-SENSITIVE MAGNET SWITCH 89
MAGNET MUSIC 90
MUSICAL PENDULUM 91
DAMPED OSCILLATING TONE 91
PRESSURE-SENSITIVE TONE 91
SUPER-SENSITIVE FIELD SENSOR 92
SUPER-SENSITIVE FIELD SWITCH 93
GIANT COMPASS MAGNETOMETER 94
HALL SENSOR NORTH COMPASS 95
SPECIALIZED HALL SENSORS 96
A3421 DIRECTION SENSOR 96
ATS610 GEAR TOOTH SENSOR 96

III. SOLAR CELL PROJECTS

OVERVIEW 97

SOLAR ENERGY MILESTONES 98-99

ENERGY FROM THE SUN 100

THE SOLAR CONSTANT 100
- SOLAR CONSTANT TABLE 101

SUNLIGHT AND ATMOSPHERE 102

SOLAR CELLS 104
- HOW SOLAR CELLS WORK 104
- SOLAR CELL EFFIENCY 105
- SILICON SOLAR CELL RATINGS 106
- SILICON SOLAR CELL VOLTAGE 106
- INCREASING SOLAR CELL VOLTAGE 106
- SILICON SOLAR CELL CURRENT 107
- INCREASING SOLAR CELL CURRENT 107
- SOLDERING LEADS TO SOLAR CELLS 108
- MOUNTING SOLAR CELLS 110
- ADVANTAGES OF MOUNTED CELLS 110
- INSTALLING CELLS IN AN ENCLOSURE 110
- MOUNTING SOLAR CELLS ON A PANEL 111

SOLAR CELL CONCENTRATORS 112
- PARABOLIC REFLECTOR 112
- FRESNEL LENS 113
- TROUGH CONCENTRATOR 113
- BOX CONCENTRATOR 113

SOLAR CELL BATTERY CHARGERS 114
- STORAGE BATTERY PRECAUTIONS 114
- SOLAR CELL BATTERY CHARGER 116
- MONITORING A SOLAR CHARGER 117

TAKE A SOLAR CELL INTO SPACE 118

SOLAR POWERED MOTORS 122
BASIC SOLAR POWERED MOTOR 122
HIGHER POWER SOLAR MOTOR 122
REVERSIBLE SOLAR MOTOR 123
SOLAR MOTOR WITH BATTERY BACKUP 123

SOLAR ACTUATED MOTORS 124
POWER FET ACTUATOR (1) 124
TRANSISTOR ACTUATOR 124
POWER FET ACTUATOR (2) 125
OP AMP-POWER FET ACTUATOR 125

SOLAR CELL LIGHT METERS 126
LIGHT METER (VOLTAGE TYPE) 126
LIGHT METER (CURRENT TYPE) 126
SOLAR CELL RADIOMETER 127

SUNLIGHT ACTUATED RELAY 128

LIGHT ACTUATED RELAY 129

BREAK-BEAM DETECTION 130
STEADY-STATE BREAK-BEAM SYSTEM 131
PULSED BREAK-BEAM SYSTEM 132
PULSED BREAK-BEAM TRANSMITTER 132
PULSED BREAK-BEAM RECEIVER 133

SUN POWERED TONE GENERATORS 134
SOLAR POWERED PIEZO BUZZER 134
SOLAR POWERED DUAL GATE OSCILLATOR 134
SOLAR POWERED 555 OSCILLATOR 135
SOLAR POWERED CLICKERS 135

LIGHT CONTROLLED TONE 136
LIGHT CONTROLLED 555 OSCILLATOR 136
HIGH-GAIN LIGHT CONTROLLED TONE 137

IR REMOTE CONTROL TESTERS 138
PIEZO AND MAGNETIC TESTERS 138
TRANSISTOR REMOTE CONTROL TESTER 139
OP AMP REMOTE CONTROL TESTER 139

SOLAR POWERED NIGHT LIGHT 140

I. SENSOR PROJECTS

OVERVIEW

ELECTRONIC SENSORS DETECT PRESSURE, HEAT, LIGHT, MAGNETIC FIELDS AND SO FORTH. THESE ARE AMONG THE SENSOR APPLICATIONS IN THIS MINI-NOTEBOOK. YOU CAN MAKE SOME SENSORS, AND MANY SENSORS AND SENSING SYSTEMS ARE AVAILABLE FROM RADIO SHACK STORES AND RADIO SHACK UNLIMITED.

DESIGN TIPS

1. THE UBIQUITOUS 741 OPERATIONAL AMPLIFIER IS USED IN THIS SECTION. OF COURSE YOU CAN SUBSTITUTE NEWER OP AMPS IF YOU DO NOT EXCEED THEIR MAXIMUM POWER SUPPLY VOLTAGE. BE SURE TO CHECK THE PIN OUTLINE.

2. UNLESS OTHERWISE SPECIFIED, USE 1/4 OR 1/2 WATT RESISTORS AND CAPACITORS RATED FOR AT LEAST THE POWER SUPPLY VOLTAGE. IF EXACT VALUES ARE UNAVAILABLE, YOU CAN USUALLY SUBSTITUTE VALUES WITHIN 10 TO 20 % OF THE SPECIFIED VALUE.

3. ALWAYS BUILD A TEST VERSION OF A CIRCUIT ON A SOLDERLESS BREADBOARD BEFORE MAKING A PERMANENT VERSION. THIS WILL ALLOW YOU TO MAKE MODIFICATIONS TO THE CIRCUIT.

SAFETY FIRST

1. POWER SENSOR CIRCUITS WITH BATTERIES.

2. DO-IT-YOURSELF SENSOR CIRCUITS ARE NOT APPROPRIATE FOR MEDICAL APPLICATIONS OR WHEN HUMAN LIFE OR SAFETY IS AT RISK.

ELECTRONIC SENSORS

AN ELECTRONIC SENSOR RESPONDS TO AN EXTERNAL STIMULUS SUCH AS LIGHT, SOUND, PRESSURE, VIBRATION OR TEMPERATURE. MOST SENSORS CAN BE PLACED IN ONE OF TWO CATEGORIES: SIMPLE GO-NO GO SENSORS THAT ACT MUCH LIKE AN ON-OFF SWITCH AND ANALOG SENSORS WHOSE OUTPUT IS PROPORTIONAL TO THE STIMULUS.

GO-NO GO SENSORS

GO-NO GO SENSORS ARE ALSO KNOWN AS ON-OFF, YES-NO OR BINARY SENSORS. SOME ARE SIMPLE MECHANICAL DEVICES SUCH AS MAGNETIC PROXIMITY SWITCHES AND VIBRATION SENSORS LIKE THOSE USED IN VARIOUS SECURITY SYSTEMS.

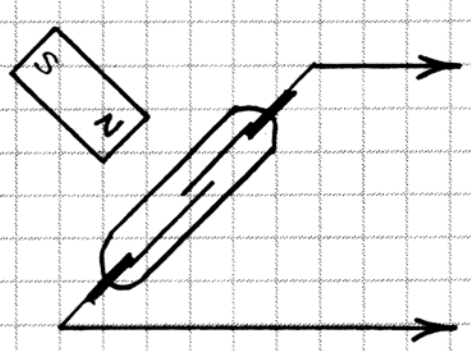

MAGNETIC REED SWITCH
(MAGNET SENSOR)

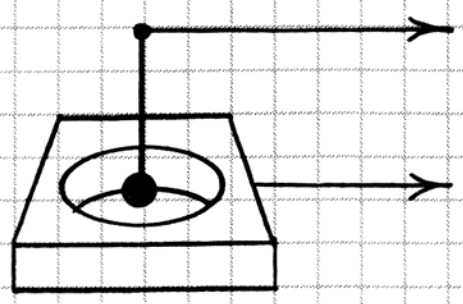

PENDULUM SWITCH
(VIBRATION SENSOR)

SOME GO-NO GO SENSORS INCLUDE AN ANALOG SENSOR AND A CIRCUIT THAT SWITCHES ON (OR OFF) WHEN THE AMPLITUDE OF WHAT IS BEING SENSED EXCEEDS (OR FALLS BELOW) A CERTAIN LEVEL. OFTEN THE POINT AT WHICH THE CIRCUIT SWITCHES CAN BE ADJUSTED BY ADDING OR CHANGING THE VALUE OF AN EXTERNAL RESISTOR OR BY A DIGITAL SWITCH ARRAY.

ANALOG SENSORS

MANY KINDS OF ANALOG SENSORS ARE READILY AVAILABLE. SOME OF THE MOST COMMON ARE DESCRIBED HERE.

PHOTORESISTOR

LIGHT-SENSITIVE RESISTOR WHOSE RESISTANCE CHANGES WITH LIGHT.

PHOTODIODE

LIGHT-SENSITIVE DIODE WHICH PRODUCES A CURRENT IN RESPONSE TO LIGHT.

THERMISTOR

TEMPERATURE-SENSITIVE RESISTOR WHOSE RESISTANCE CHANGES WITH TEMPERATURE.

MICROPHONE

SOUND-SENSITIVE SENSOR WHICH PRODUCES A VOLTAGE OR CHANGES A CAPACITANCE AS THE SOUND LEVEL CHANGES.

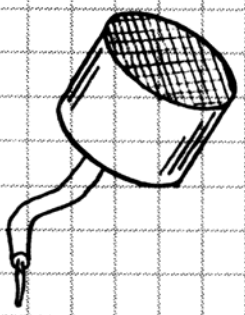

PIEZOELECTRIC

VARIOUS CRYSTALS OR CERAMICS WHICH PRODUCE A VOLTAGE WHEN BENT, VIBRATED OR SUBJECTED TO MECHANICAL SHOCK.

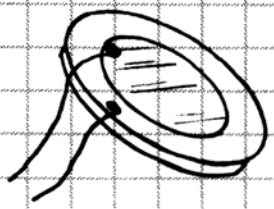

BASIC SENSOR CIRCUITS

ELECTRONIC SENSORS REQUIRE A DEVICE THAT INDICATES WHEN SOMETHING HAS BEEN SENSED. THE INDICATOR FOR A SIMPLE GO-NO GO SENSOR SUCH AS A MAGNET SWITCH CAN BE A LAMP, LED OR BUZZER.

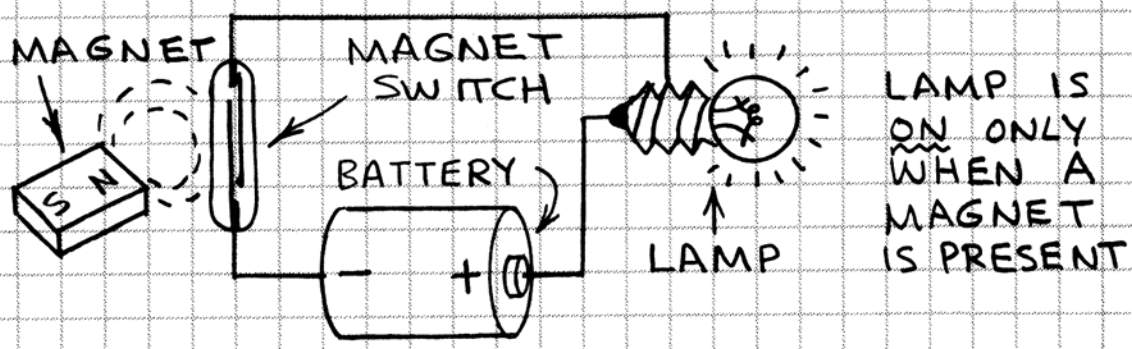

THE OUTPUT DEVICE FOR AN ANALOG SENSOR CAN BE AN ANALOG OR DIGITAL METER, AN OSCILLOSCOPE OR A COMPUTER.

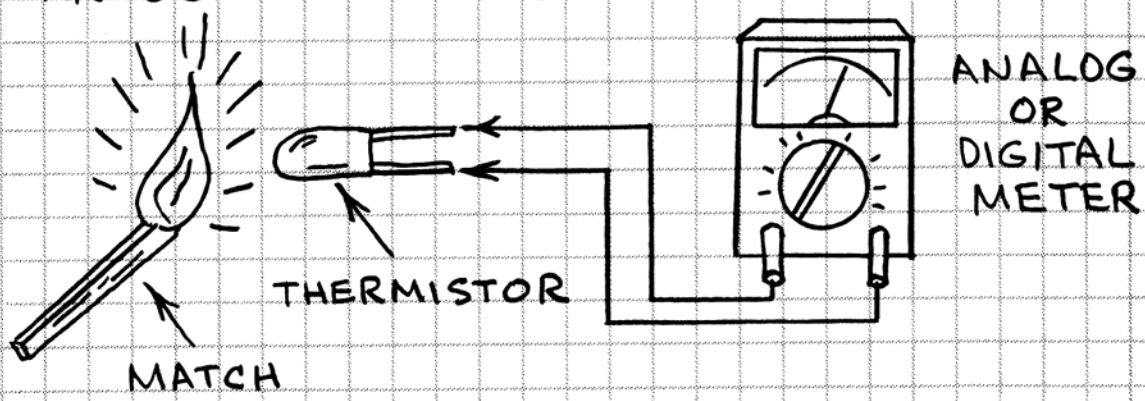

MANY ANALOG SENSORS REQUIRE A CIRCUIT TO PREPARE THE SIGNAL FOR AN OUTPUT INDICATOR. AN ESPECIALLY USEFUL CIRCUIT IS THE OPERATIONAL AMPLIFIER (OP AMP). THE OP AMP CAN TRANSFORM THE TINY CURRENT FROM A PHOTODIODE INTO A VOLTAGE THAT IS EASILY INDICATED BY A METER.

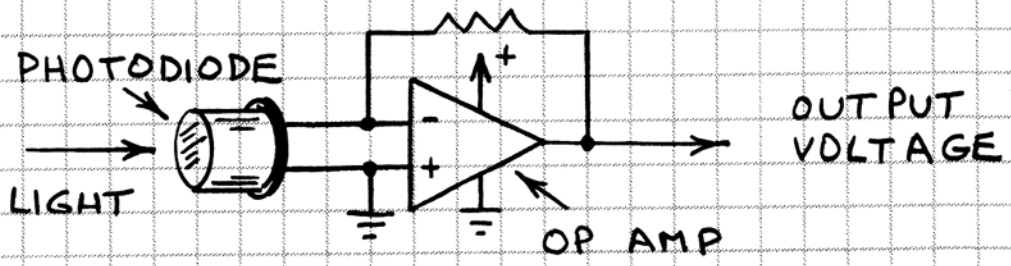

SENSORS AND COMPUTERS

GO-NO GO SENSORS CAN BE EASILY CONNECTED TO COMPUTERS AND DIGITAL CIRCUITS.

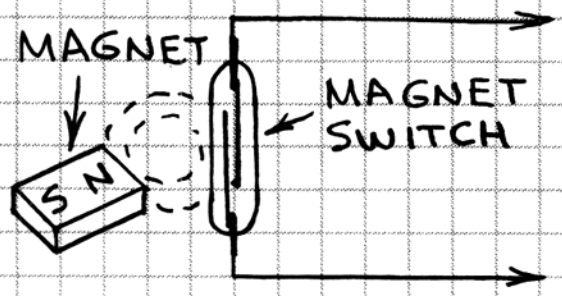

TO COMPUTER MOUSE SWITCH, JOYSTICK SWITCH OR PARALLEL PORT.

ANALOG SENSORS REQUIRE A CIRCUIT THAT TRANSFORMS THE SIGNAL FROM THE SENSOR INTO DIGITAL FORM THAT A COMPUTER CAN UNDERSTAND. ONE APPROACH IS TO CHANGE THE SIGNAL INTO A STRING OF PULSES WHOSE FREQUENCY IS PROPORTIONAL TO THE AMPLITUDE OF THE SIGNAL. THE COMPUTER IS THEN PROGRAMMED TO COUNT THE PULSES DURING A GIVEN TIME.

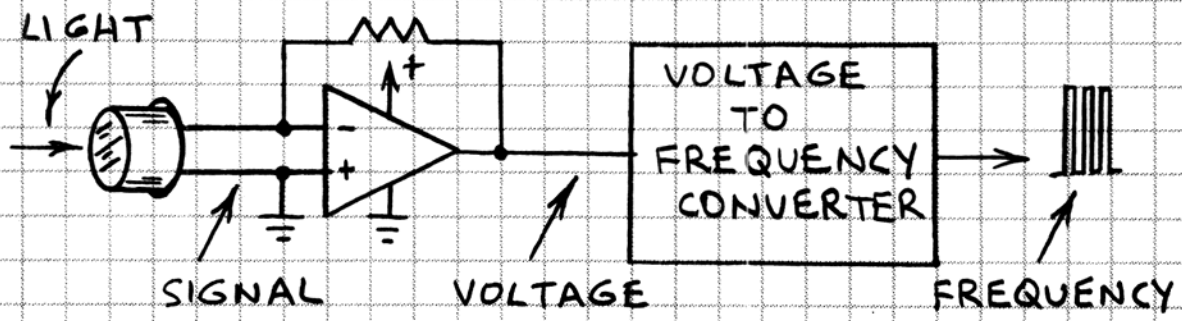

AN ANALOG-TO-DIGITAL CONVERTER (A/D CONVERTER) CHANGES A SIGNAL FROM A SENSOR INTO A BINARY NUMBER PROPORTIONAL TO THE AMPLITUDE OF THE SIGNAL.

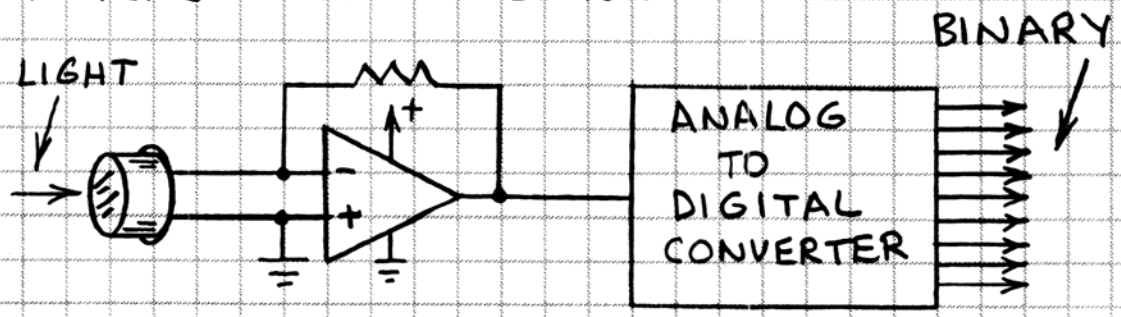

TOUCH SWITCHES

USE A STANDARD SWITCH WHEN POSSIBLE. FOR SPECIAL APPLICATIONS OR FOR ULTRA-THIN SWITCHES TRY THESE SWITCHES.

MULTI-LAYER SWITCH

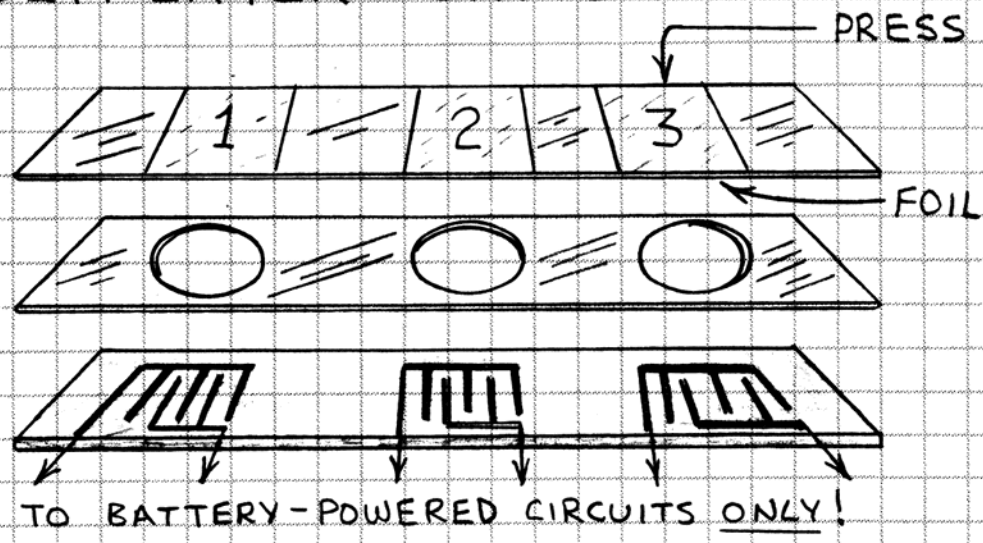

A - OVERHEAD TRANSPARENCY FILM WITH ALUMINUM FOIL SQUARES ATTACHED TO LOWER SIDE WITH CEMENT OR DOUBLE-SIDED TAPE.

B - SAME MATERIAL AS A WITH A HOLE PUNCHED AT EACH SWITCH POSITION.

C - MAKE ETCHED CIRCUIT BOARD AS SHOWN OR POSITION SWITCH ELEMENTS OVER FOIL PATTERN IN A PRE-ETCHED BOARD.

TACTILE FEEDBACK SWITCH

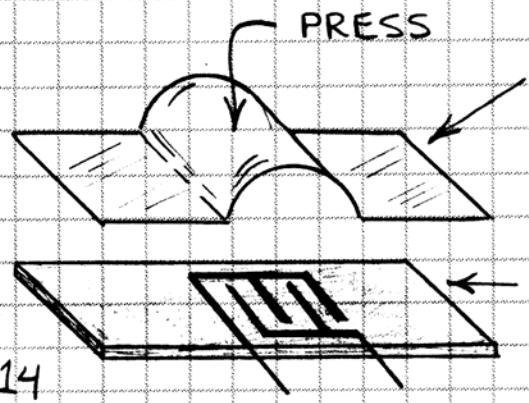

OVERHEAD TRANSPARENCY FILM WITH ALUMINUM FOIL CEMENTED OR TAPED TO LOWER SIDE AND CEMENTED OR TAPED TO ETCHED CIRCUIT BOARD WITH COMB PATTERN.

WHISKER-STYLE LEVER SWITCH

ATTACH STIFF PLASTIC ROD OR MUSIC WIRE TO MOVABLE LEVER ON A LEVER SWITCH TO MAKE A WHISKER SWITCH.

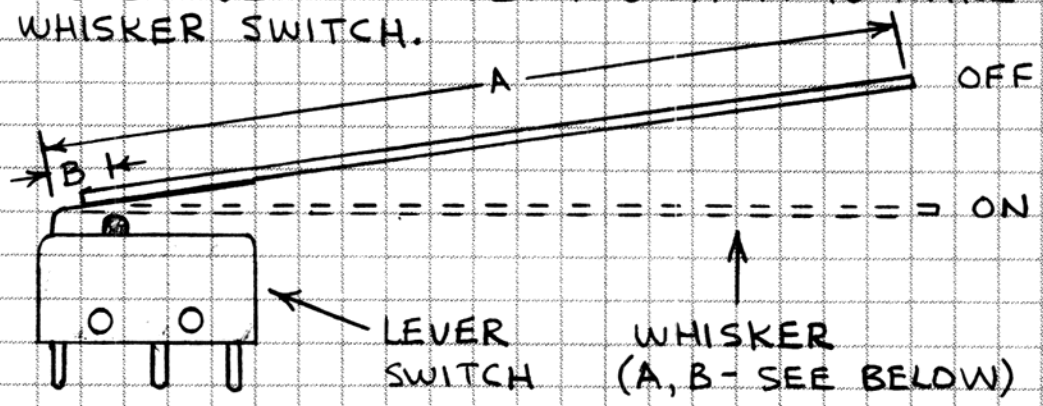

WHISKER SWITCH APPLICATIONS:

ROBOTICS - SENSE PRESENCE OF OBJECTS.

INDUSTRY - HANG WHISKER OVER CONVEYOR BELT TO DETECT CARTONS AND OBJECTS PASSING BY.

RESEARCH - DRAG WHISKER OVER SOIL OR GRASS TO DETECT AND COUNT ROCKS AND PLANTS.

PHYSICS OF LEVER SWITCHES

THE WHISKER SWITCH IS A SECOND CLASS LEVER.

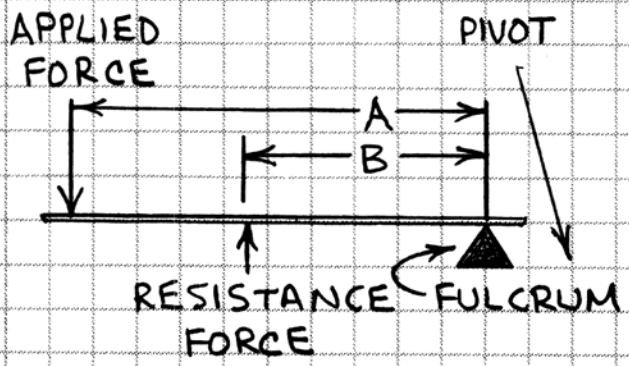

FOR AN IDEAL LEVER
APPLIED FORCE × A =
RESISTANCE FORCE × B

RESULTS BELOW FROM POSTAGE SCALE AND RULER TAPED TO SWITCH LEVER. RULER WAS PRESSED AGAINST SCALE PLATFORM.

A (cm)	FORCE (grams)
2	49.6
5	22.7
10	11.3
15	7.1

1 OUNCE = 28.35 GRAMS

PUFF SWITCH

A PUFF SWITCH IS CLOSED BY AIR PRESSURE OR SIMPLY BY BLOWING INTO A TUBE. PUFF SWITCHES ARE EXPENSIVE AND HARD TO FIND, BUT YOU CAN EASILY MAKE THEM. OF THE VARIOUS KINDS I HAVE MADE THE TYPE SHOWN HERE IS THE MOST RELIABLE.

PRINCIPLE OF OPERATION:

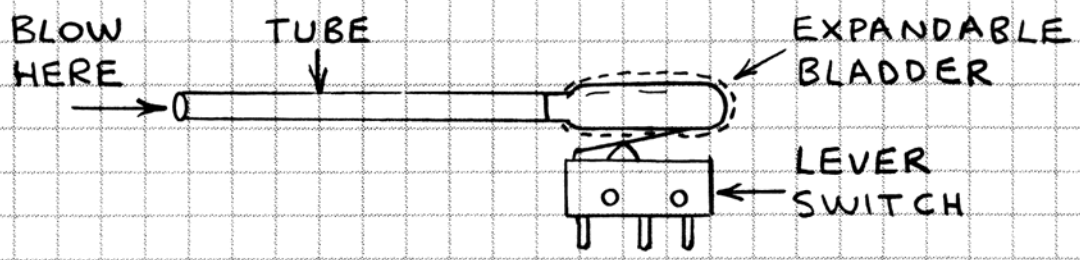

MOISTURE IN YOUR BREATH WILL CONDENSE INSIDE THE TUBE AND CAUSE A SWITCH MECHANISM TO CORRODE OR STICK. THIS METHOD KEEPS MOISTURE AWAY FROM THE SWITCH. BELOW IS A DEMONSTRATION SWITCH WHICH CAN FORM THE BASIS OF A WORKING PUFF SWITCH.

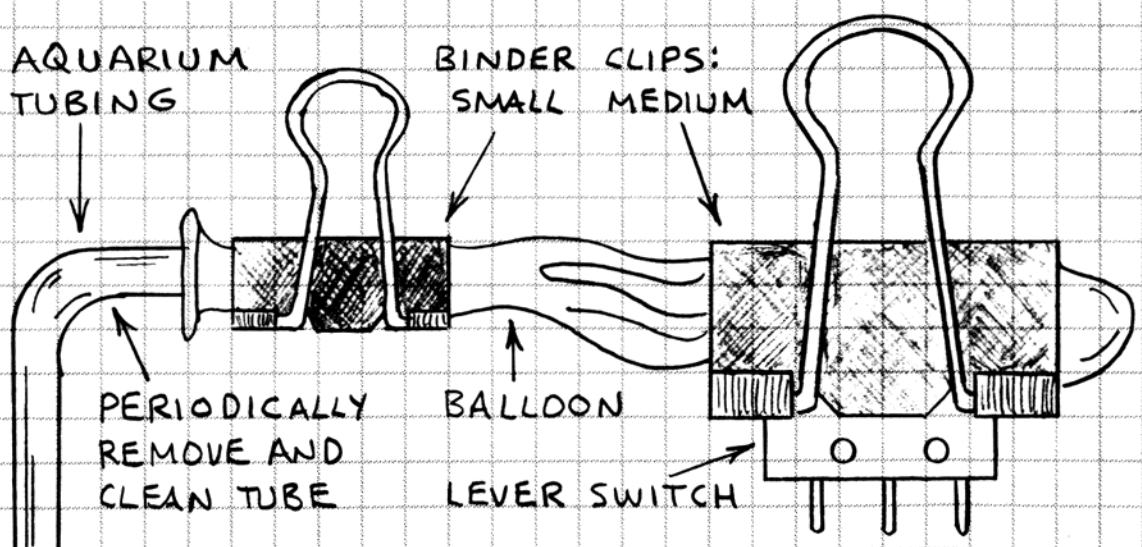

THIS ARRANGEMENT ALLOWS YOU TO QUICKLY MAKE A DEMONSTRATION PUFF SWITCH. FOR PERMANENT USE INSTALL IN A PLASTIC BOX CONNECTED TO THE OUTSIDE WORLD WITH A BRASS AQUARIUM TUBE JUNCTION AND SWITCH WIRES.

BLOW HERE

PAPER CLIP SWITCH

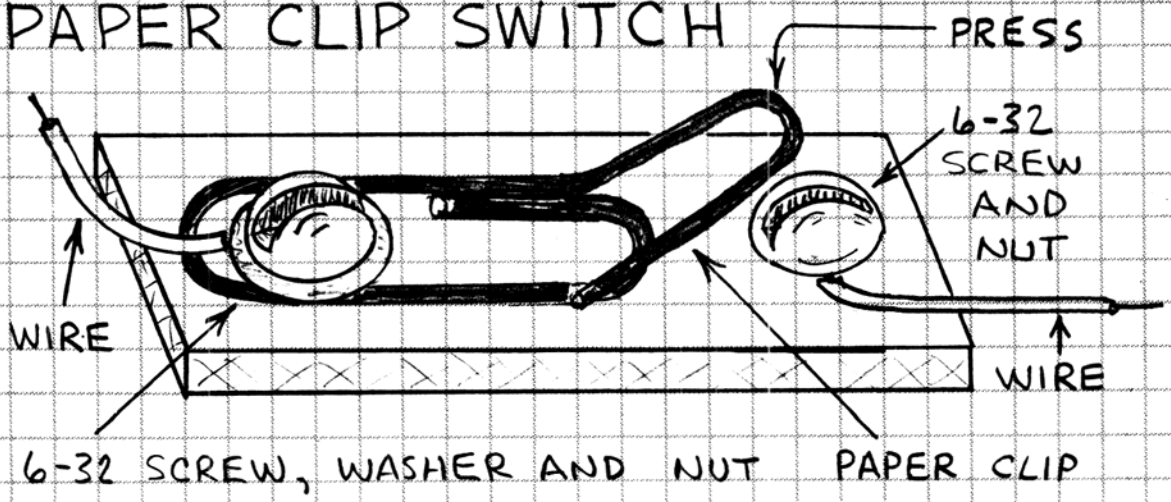

PHONE PLUG SWITCH

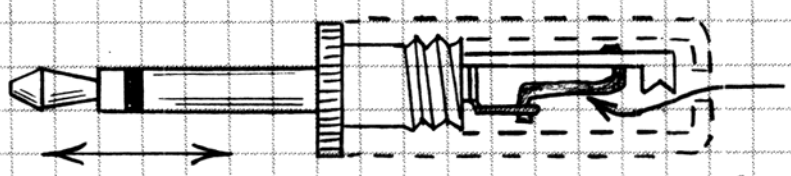

INSERT PLUG IN JACK TO CLOSE SWITCH.
PULL PLUG FROM JACK TO OPEN SWITCH.

TILT SWITCH

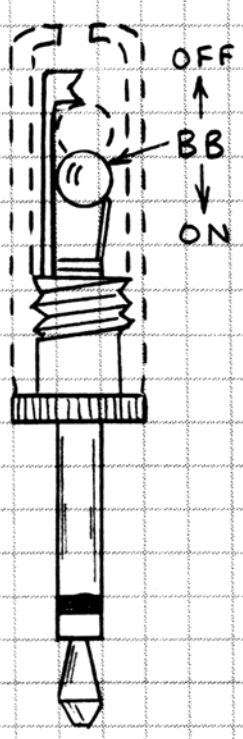

THIS SWITCH CLOSES WHEN A STEEL AIR GUN SHOT (BB) ROLLS AGAINST THE TERMINALS IN A 1/8-INCH PHONE PLUG. INVERT PHONE PLUG TO OPEN SWITCH.

PROTOTYPE USED ZINC-PLATED, 4.5 mm BB COATED WITH A LAYER OF PROTECTIVE LACQUER WHICH DOES NOT CONDUCT ELECTRICITY. THEREFORE I PLACED BB IN SMALL HOLE BORED IN WOOD, MELTED SOLDER OVER IT AND PUSHED BB FROM HOLE WITH SOLDERING IRON. (BB WAS HOT!)

MUSIC WIRE VIBRATION SENSOR

MUSIC WIRE (AVAILABLE FROM HOBBY AND CRAFT STORES) IS STIFF STEEL WIRE THAT SPRINGS BACK TO ITS ORIGINAL POSITION AFTER BEING BENT GENTLY. MUSIC WIRE CAN BE USED TO MAKE MANY KINDS OF TILT AND VIBRATION SWITCHES THAT WORK IN VARIOUS POSITIONS. CAUTION: USE DO-IT-YOURSELF SENSOR LIKE THIS ONLY FOR BATTERY-POWERED APPLICATIONS!

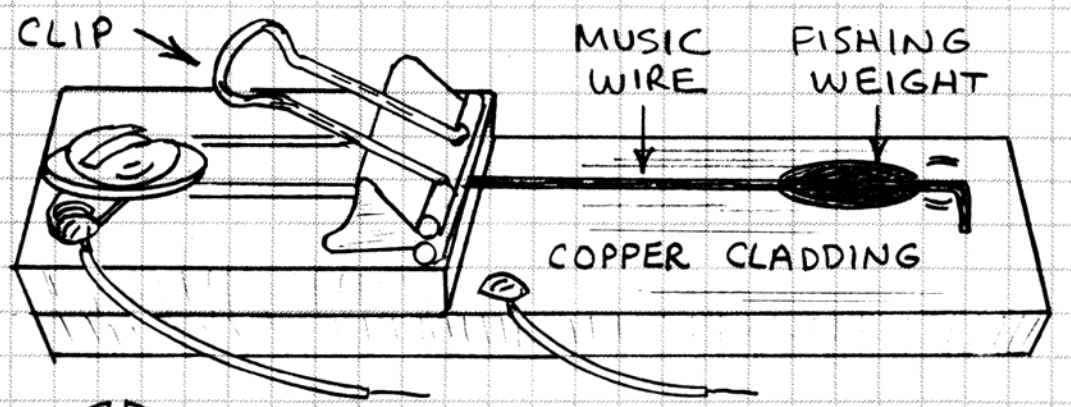

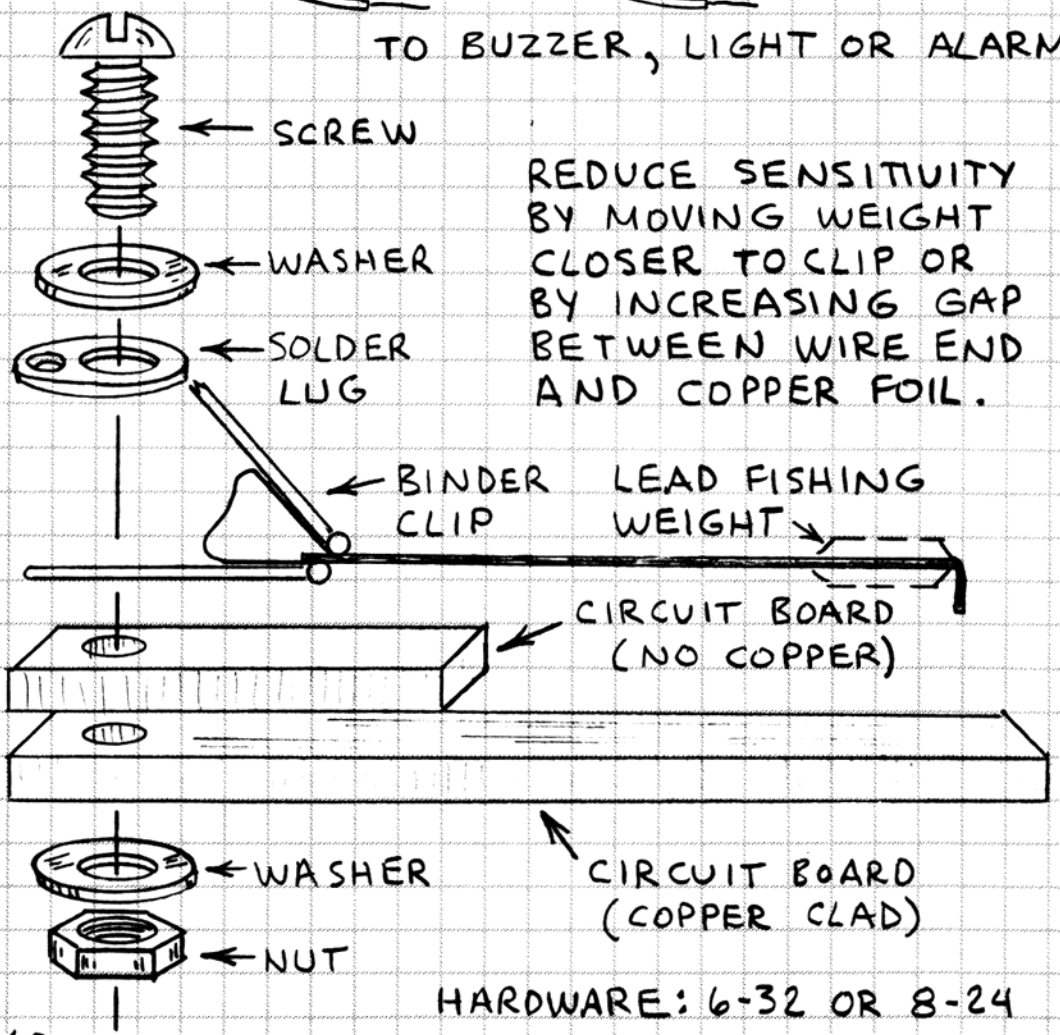

REDUCE SENSITIVITY BY MOVING WEIGHT CLOSER TO CLIP OR BY INCREASING GAP BETWEEN WIRE END AND COPPER FOIL.

HARDWARE: 6-32 OR 8-24

PIEZOELECTRIC VIBRATION SENSOR

CERTAIN CRYSTALS AND CERAMICS BEND IN RESPONSE TO A VOLTAGE AND GENERATE A VOLTAGE WHEN BENT. THIS PROPERTY IS THE PIEZOELECTRIC EFFECT. A PIEZOELECTRIC BUZZER ELEMENT IS A SENSITIVE VIBRATION SENSOR. TRY THIS:

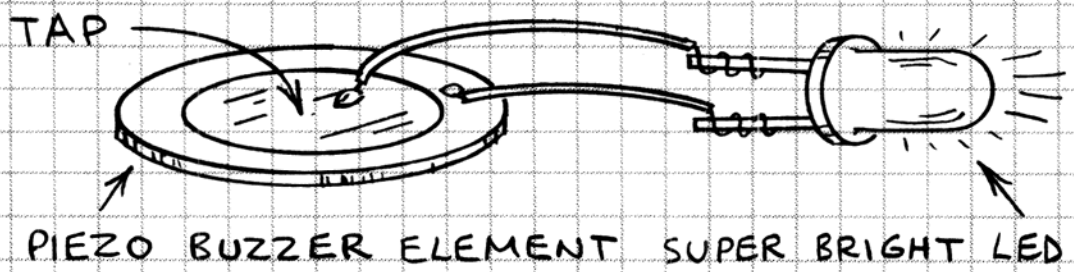

TAP THE PIEZO ELEMENT WITH A PENCIL WHILE LOOKING INTO THE END OF THE LED. EACH TAP WILL CAUSE THE LED TO FLASH.

THE SETUP BELOW IS A SEISMIC SENSOR. THE VERSION I MADE DETECTED TRAINS 1 MILE (1.6 KM) AWAY. CONNECT THE LEADS FROM THE PIEZO ELEMENT TO AN ANALOG VOLT METER. SEISMIC VIBRATIONS WILL CAUSE THE NEEDLE TO JUMP UP TO A VOLT OR SO. THE WEIGHT CAN BE A LEAD FISHING WEIGHT OR A 9-VOLT BATTERY.

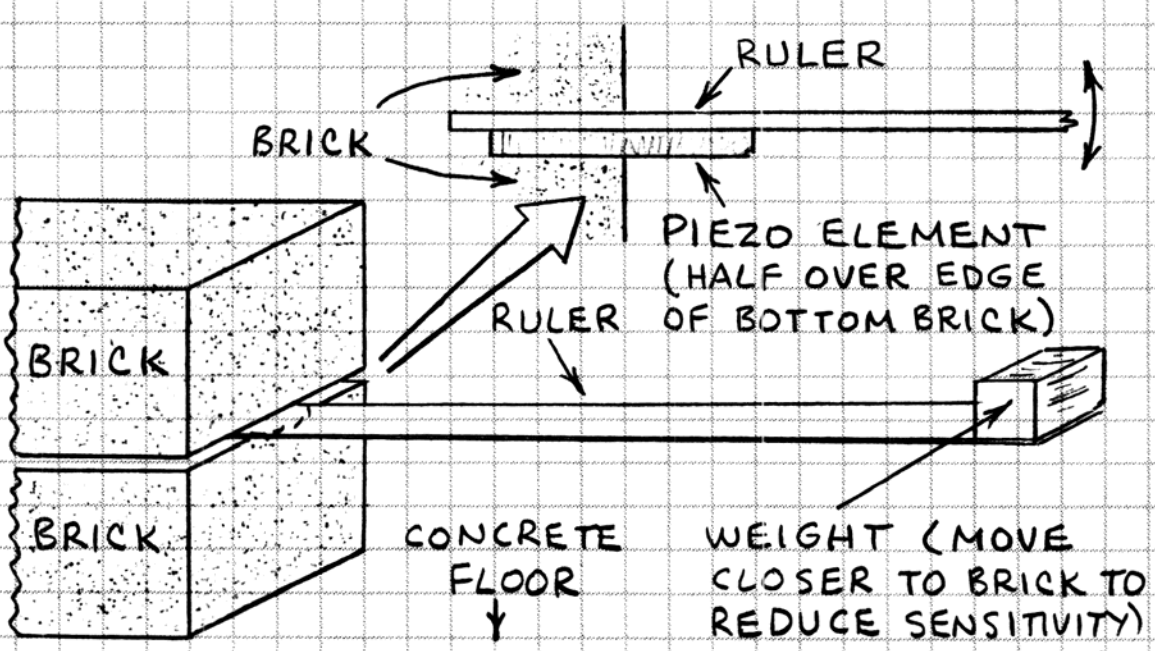

PENDULUM SWITCH

PENDULUM SWITCHES ARE IDEAL FOR DETECTING TILT AND VIBRATION. THEY ARE USED IN SECURITY SYSTEMS AND SEISMIC SENSORS. PENDULUM SWITCHES ARE EASILY MADE FROM READILY AVAILABLE MATERIALS. HERE'S ONE YOU CAN MAKE.

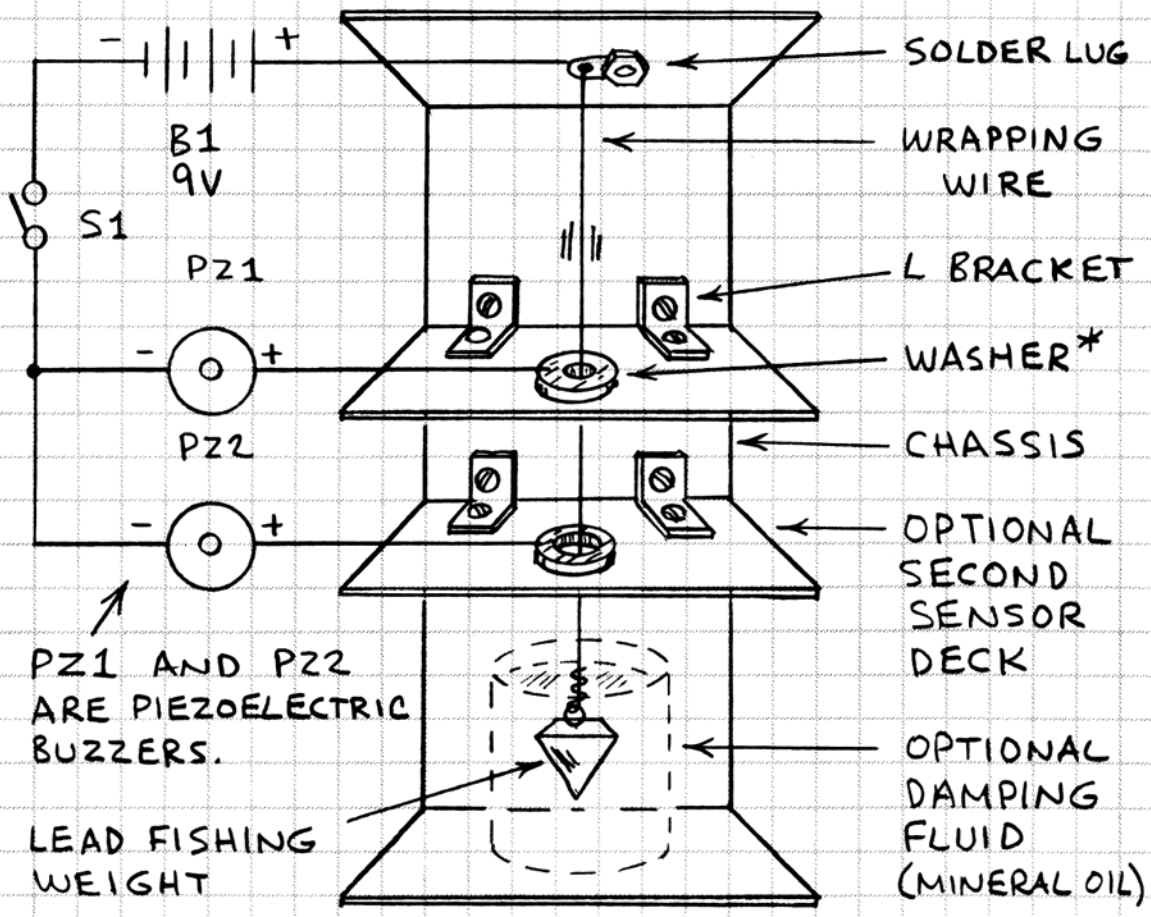

*WASHER— USE TINNED WASHER. SOLDER A WIRE TO WASHER. CEMENT WASHER OVER HOLE DRILLED IN THE SENSOR DECK.

CHASSIS IS PLASTIC OR METAL ENCLOSURE. SENSOR DECK IS CIRCUIT BOARD MATERIAL (WITHOUT COPPER FOIL). SECOND SENSOR DECK HAS WASHER WITH LARGER HOLE THAN WASHER IN UPPER DECK. THIS PROVIDES A SECOND SIGNAL AS TILT OR VIBRATION IS INCREASED.

PENDULUM QUADRANT SWITCH

REPLACE THE SIMPLE GO-NO GO WASHER SWITCH ON THE FACING PAGE WITH A CIRCULAR ARRAY OF FOUR OR MORE SEGMENTS AND YOU CAN MAKE A SWITCH WHICH INDICATES THE DIRECTION OF TILT OR VIBRATION.

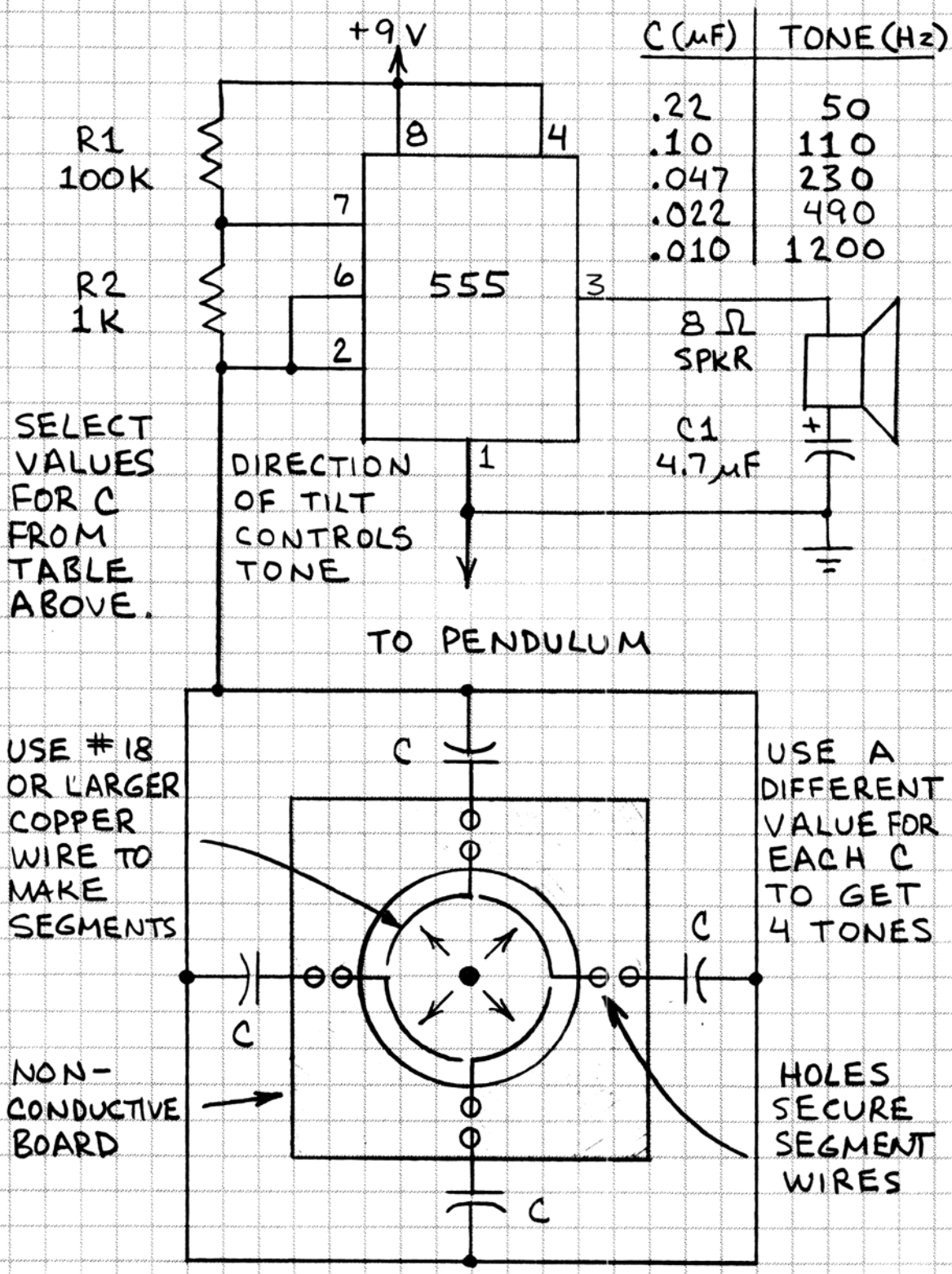

C (μF)	TONE (Hz)
.22	50
.10	110
.047	230
.022	490
.010	1200

SWITCH-TYPE ALARM SYSTEMS

MANY SECURITY ALARM SYSTEMS USE ON-OFF (SPST) SWITCHES TO DETECT OPEN DOORS AND WINDOWS OR VIBRATION. MAGNET SWITCHES, METAL FOIL (WHICH BREAKS WHEN A WINDOW IS BROKEN) AND VIBRATION SENSORS ARE OFTEN USED.

TYPICAL MAGNET SWITCH

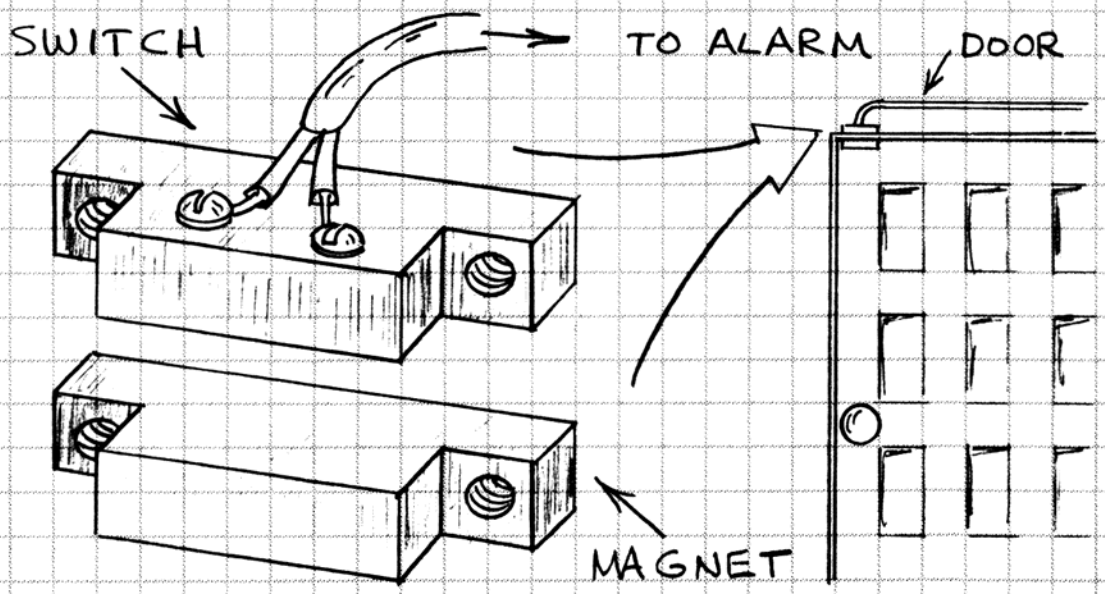

BASIC OPEN-CIRCUIT ALARM

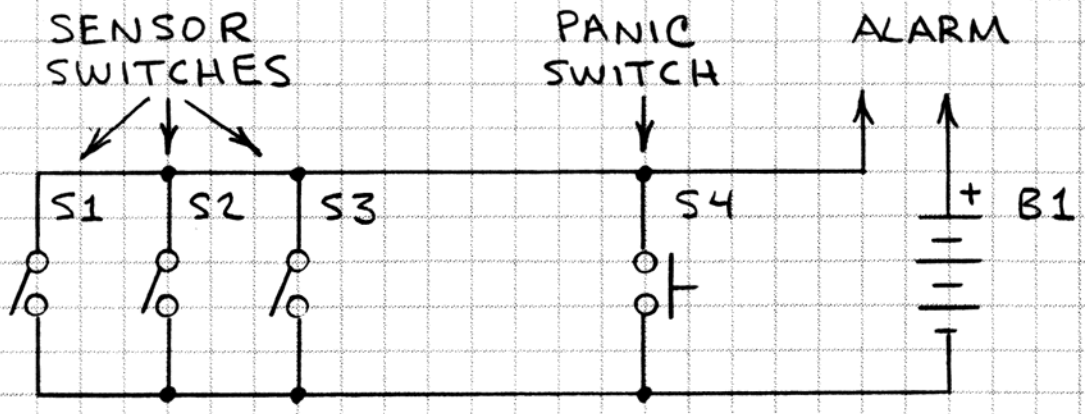

ALARM (BELL, SIREN, BUZZER OR LAMP) IS ACTIVATED WHEN A SWITCH CLOSES. BUT THIS CIRCUIT IS EASILY DEFEATED SIMPLY BY CUTTING A WIRE.

IMPROVED OPEN-CIRCUIT ALARM

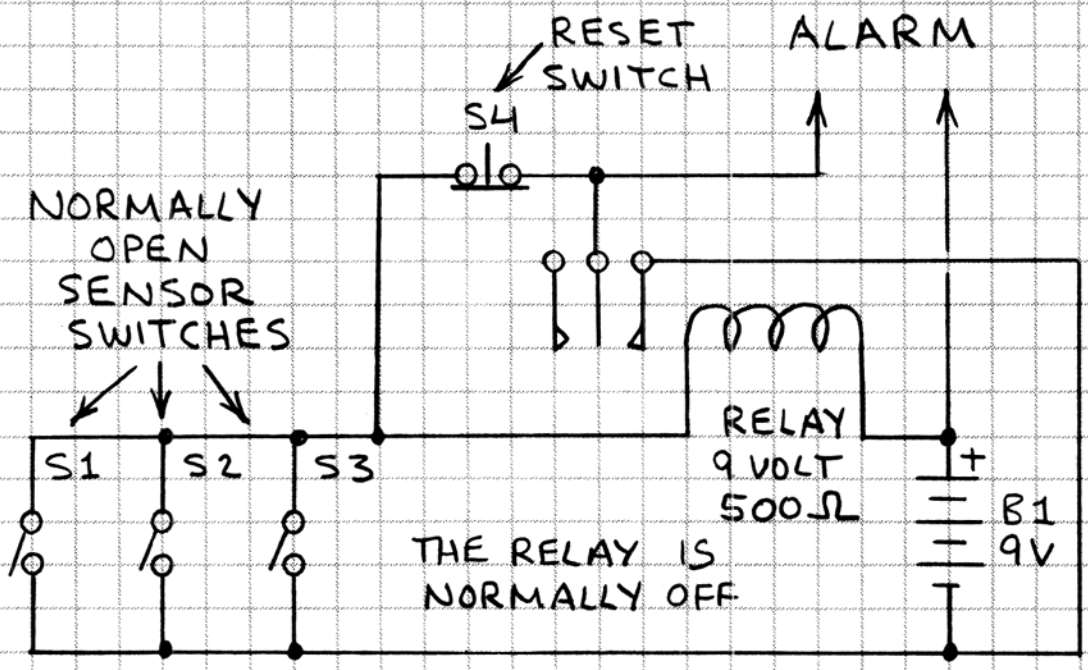

WHEN A SENSOR SWITCH IS CLOSED THE RELAY PULLS IN AND THE ALARM STAYS ON UNTIL THE RESET SWITCH IS OPENED. THE CIRCUIT CAN BE DEFEATED BY CUTTING A SWITCH WIRE <u>BEFORE</u> CLOSING A SENSOR.

CLOSED-CIRCUIT ALARM

THIS CIRCUIT MONITORS THE SENSOR SWITCHES CONTINUOUSLY. THE ALARM IS ACTIVATED IF A SWITCH WIRE IS CUT. THE RELAY DRAWS CURRENT CONTINUOUSLY.

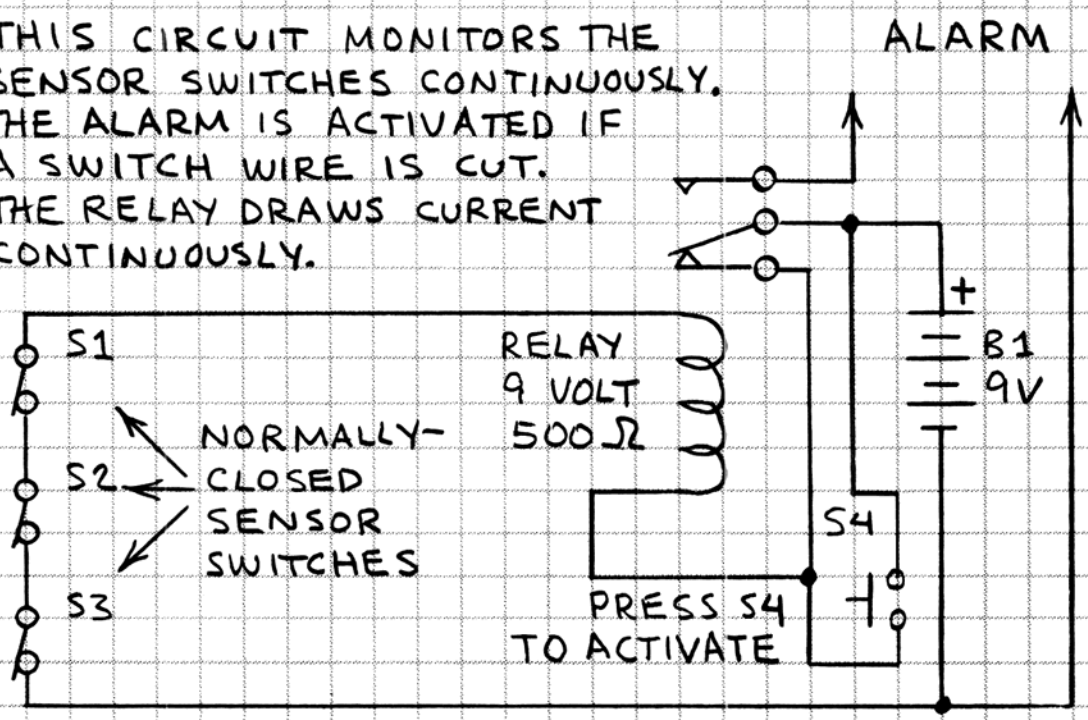

INTELLIGENT SWITCH SENSOR

WIRED SECURITY SYSTEMS ARE MORE SECURE WHEN THE SENSOR SWITCHES ARE NORMALLY-CLOSED AND CONNECTED IN SERIES LIKE THIS:

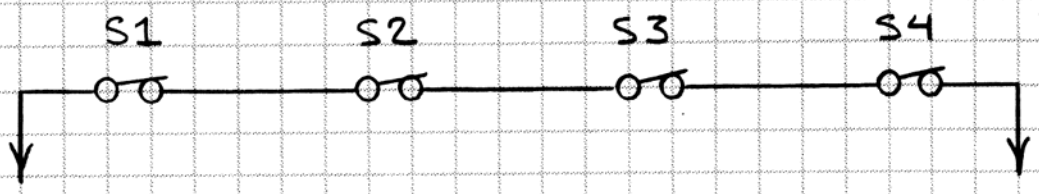

WHEN A SWITCH IS OPENED AN ALARM SOUNDS OR A LAMP FLASHES ON. BUT THE CIRCUIT DOES NOT INDICATE WHICH SWITCH IS OPEN. THIS CIRCUIT DOES:

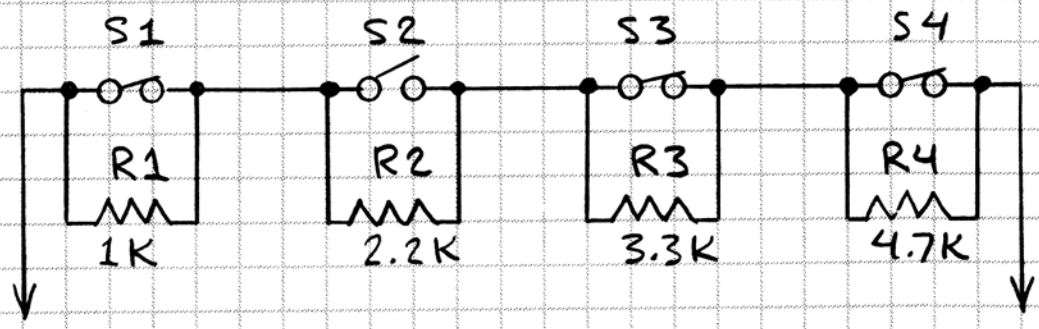

NORMALLY THE OUTPUT IS CLOSE TO 0 OHM. WHEN A SWITCH IS OPENED, A CORRESPONDING RESISTANCE APPEARS AT THE OUTPUT. WITH THE RESISTANCES ABOVE, IF THE OUTPUT IS 2.2K THEN S2 IS OPEN. THIS METHOD ALSO INDICATES WHICH OF TWO OR MORE SWITCHES ARE OPEN. WITH THE VALUES ABOVE, IF THE OUTPUT IS 5.5K, THEN SWITCHES 2 AND 3 ARE OPEN.

IMPORTANT TIPS

USE GREAT CARE WHEN DESIGNING AND INSTALLING SECURITY ALARM SYSTEMS. BE SURE BATTERIES ARE FRESH AND TEST THE SYSTEM OFTEN.

INTELLIGENT SECURITY ALARM

S1-S5: NORMALLY CLOSED MAGNET SWITCHES

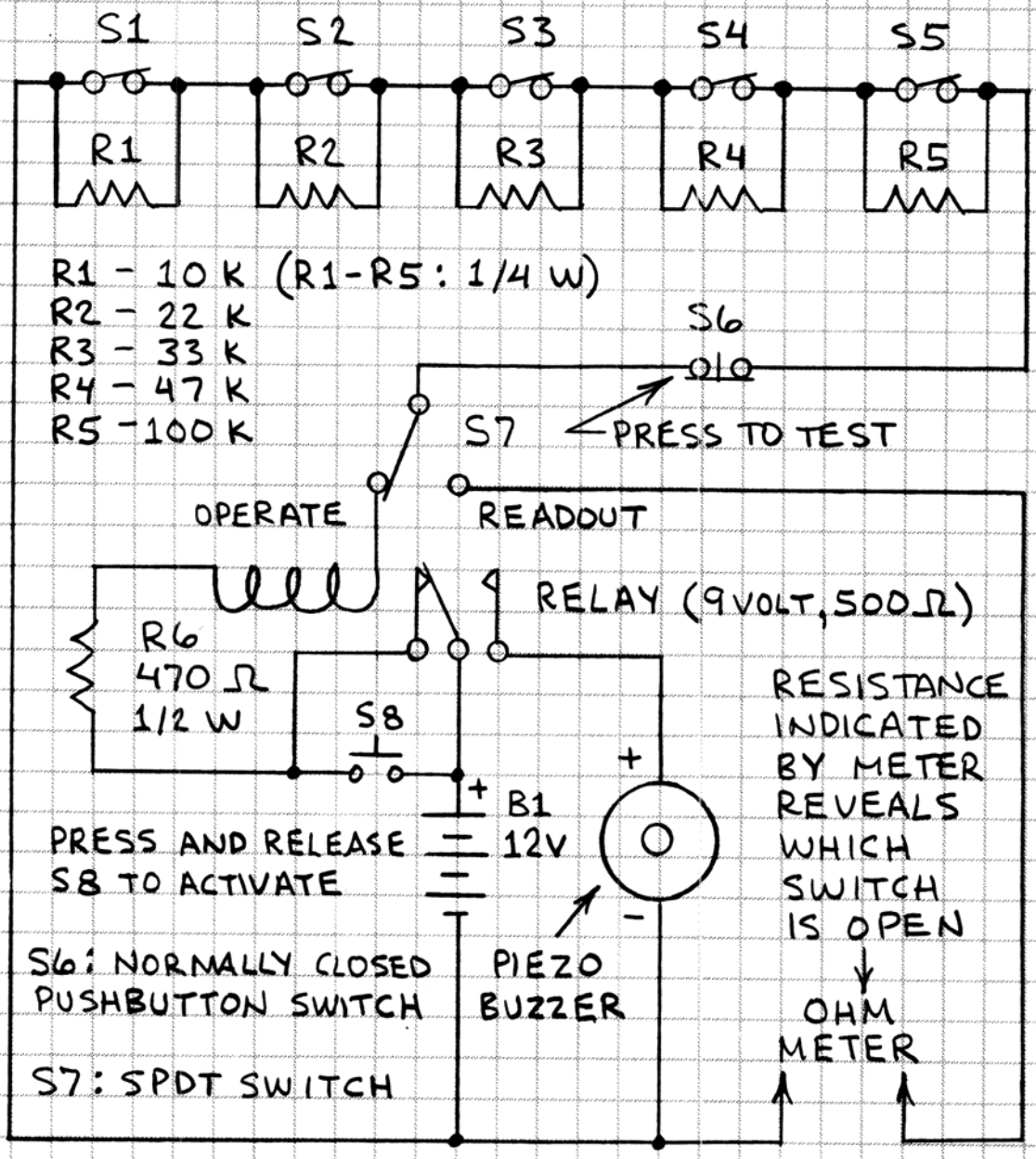

OPERATION:

1. PRESS S6 TO TEST. (BUZZER WILL SOUND.)

2. IF ALARM SOUNDS, TOGGLE S7 TO THE READOUT POSITION TO SILENCE BUZZER. THEN SWITCH ON OHM METER AND READ THE RESISTANCE. IF RESISTANCE IS ONLY A FEW OHMS, THE BATTERY IS TOO WEAK TO PULL IN THE RELAY.

FIRE OR WATER SENSOR

THIS NORMALLY-CLOSED SWITCH IS KEPT CLOSED BY A SUBSTANCE THAT MELTS WHEN HOT OR DISSOLVES WHEN WET. FOR SAFETY THE SWITCH OPENS IF IT IS DESTROYED.

FIRE: PLACE SECTION OF BIRTHDAY CANDLE IN SENSOR GAP. SWITCH WILL OPEN WHEN WAX MELTS OR IF CLOTHES PIN BURNS AWAY.

WATER: PLACE ASPIRIN OR OTHER WATER SOLUBLE TABLET OR CAPSULE IN SENSOR GAP.

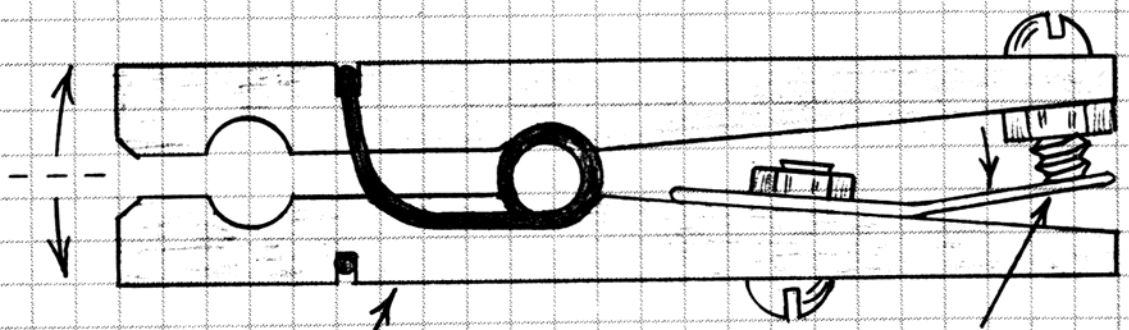

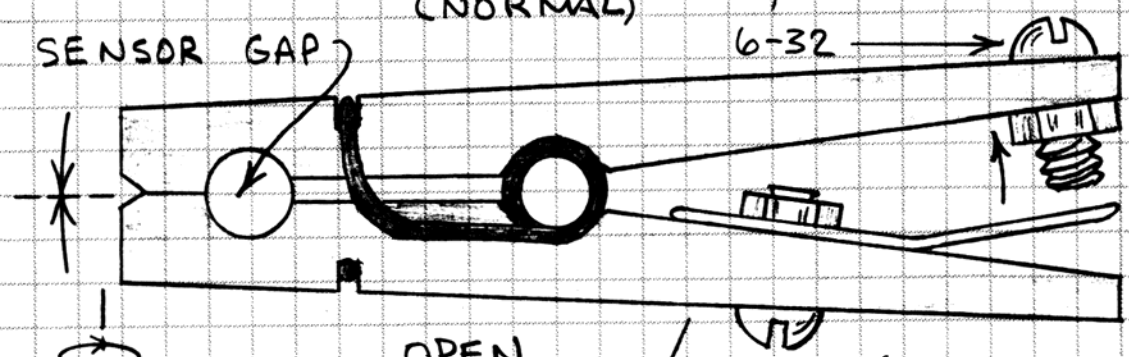

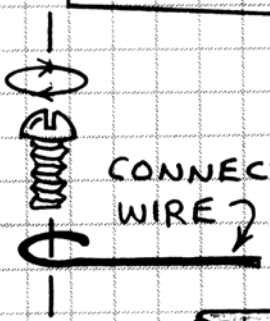

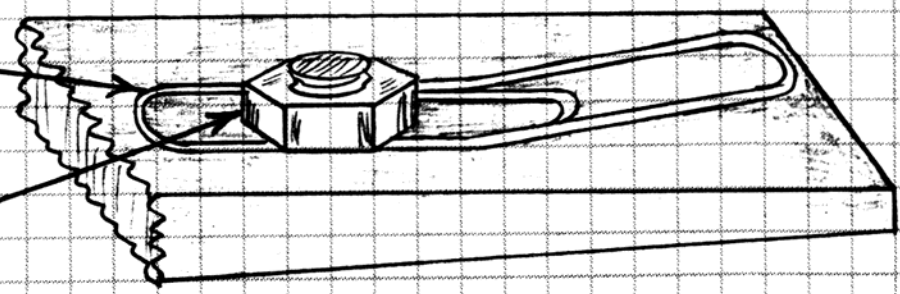

PULL SWITCH

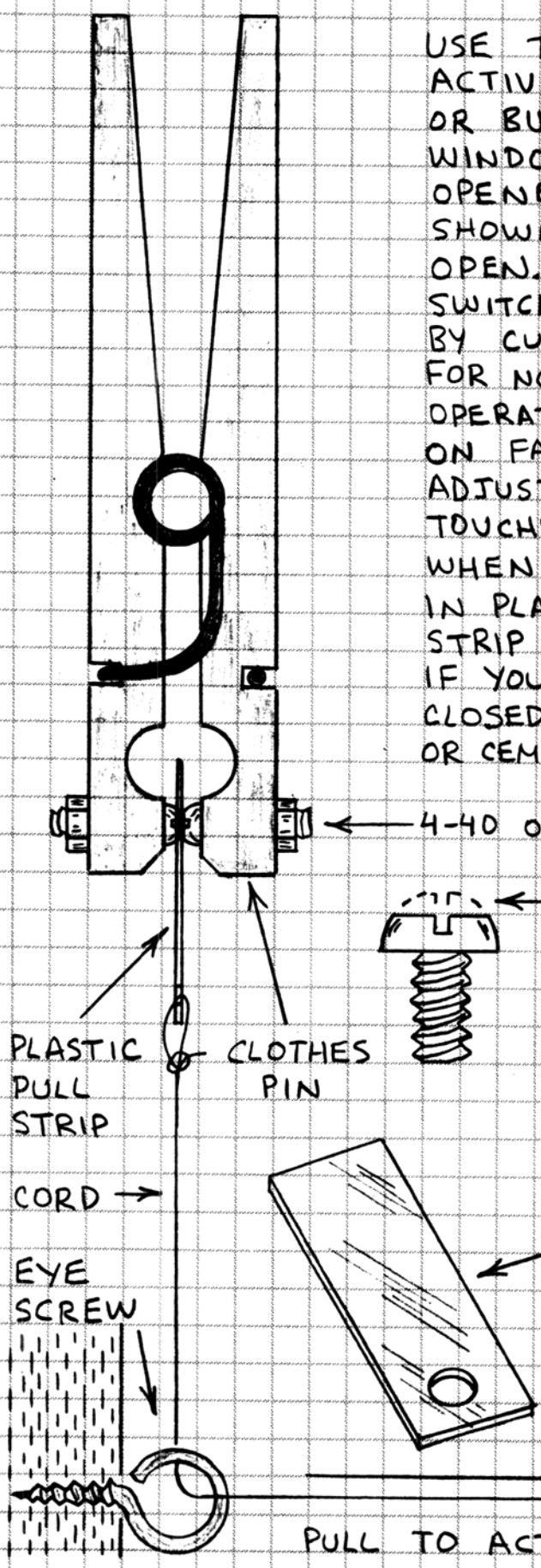

USE THIS SWITCH TO ACTIVATE A LIGHT, SIREN OR BUZZER WHEN A DOOR, WINDOW OR MAIL BOX IS OPENED. THE VERSION SHOWN HERE IS NORMALLY OPEN. THIS MEANS THE SWITCH CAN BE BYPASSED BY CUTTING ITS LEADS. FOR NORMALLY CLOSED OPERATION USE THE SWITCH ON FACING PAGE AND ADJUST SCREW SO THAT IT TOUCHES THE PAPER CLIP WHEN THE PULL STRIP IS IN PLACE. A THICKER PULL STRIP MIGHT BE NECESSARY IF YOU USE THE NORMALLY CLOSED SWITCH. USE SCREWS OR CEMENT TO MOUNT SWITCH.

FILE THE HEAD OF ONE OR BOTH SCREWS SO CLOSING THE SWITCH WILL CAUSE THE SCREWS TO PRESS TOGETHER AND NOT SLIDE TO ONE SIDE.

PLASTIC PULL STRIP IS CUT FROM PLASTIC MILK OR SOFT DRINK BOTTLE.

FOR BATTERY-POWERED APPLICATIONS ONLY!

VOLTAGE SENSORS

GO-NOGO VOLTAGE SENSORS HAVE MANY USEFUL APPLICATIONS. THEY CAN BE MADE USING ZENER DIODES OR COMPARATORS.

ZENER DIODE VOLTAGE SENSOR

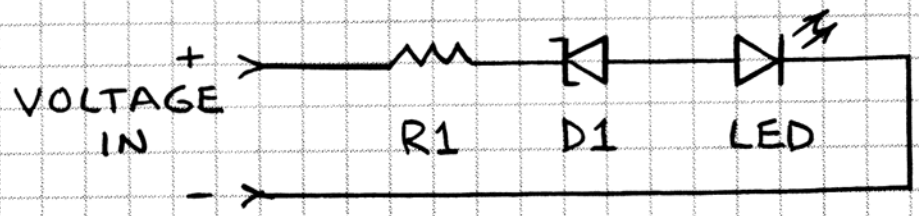

LED WILL GLOW WHEN INPUT VOLTAGE EXCEEDS BREAKDOWN VOLTAGE OF D1.

$R1 = (\text{VOLTAGE IN} - V_{LED}) / I_{LED}$

V_{LED} RANGES FROM ABOUT 2.0 TO 2.7 VOLTS FOR VISIBLE LEDs (SEE LED SPECIFICATIONS).

I_{LED} IS DESIRED CURRENT THROUGH LED. FOR 10 mA CURRENT, I_{LED} IS 0.01.

BARGRAPH VOLTAGE SENSOR

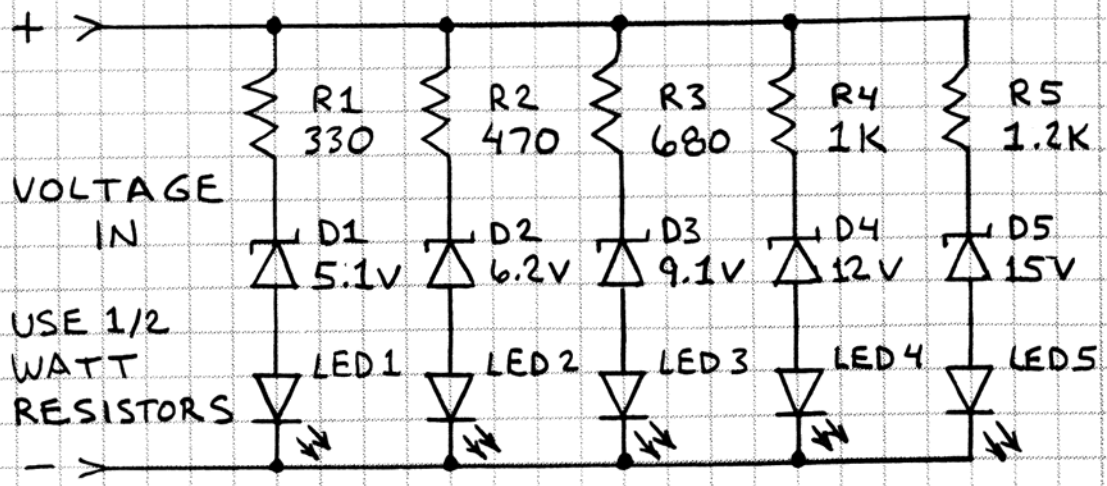

THE LEDs GLOW FROM 1 TO 5 AS INPUT VOLTAGE RISES FROM ABOUT 5 TO 15 VOLTS. OK TO USE ZENER DIODES WITH OTHER BREAKDOWN VOLTAGES.

COMPARATOR VOLTAGE SENSOR

THIS BASIC COMPARATOR VOLTAGE SENSOR DETECTS PRESENCE OF A VOLTAGE ABOVE OR BELOW AN ADJUSTABLE REFERENCE VOLTAGE.

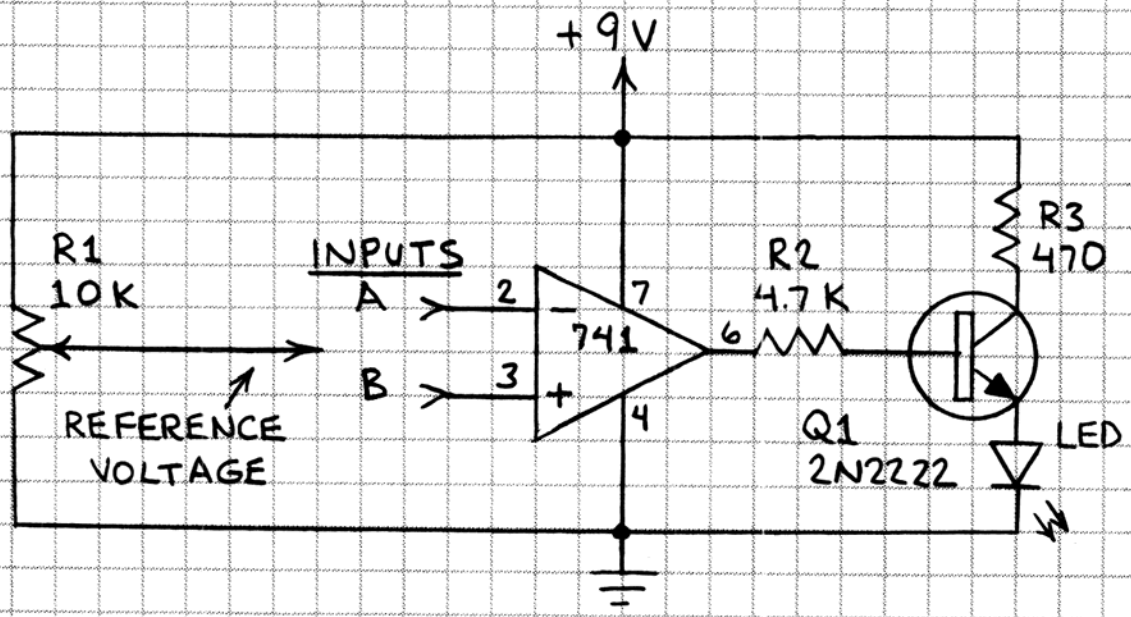

REFERENCE VOLTAGE TO INPUT B:

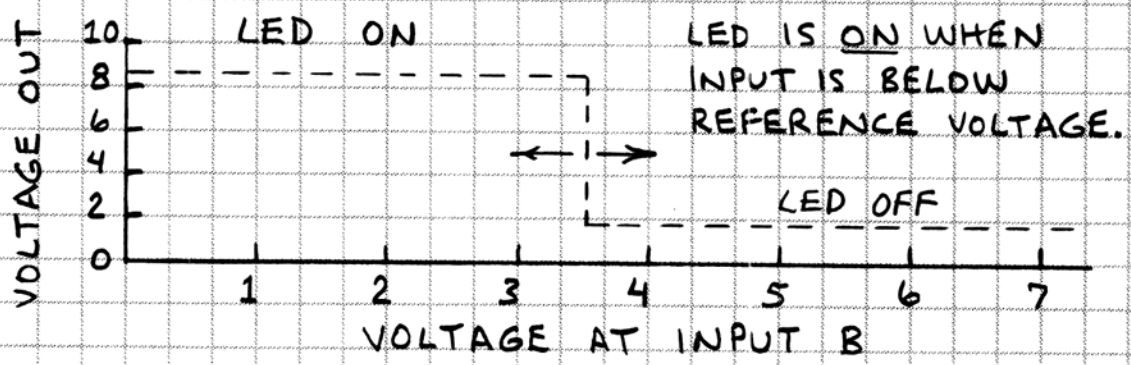

REFERENCE VOLTAGE TO INPUT A:

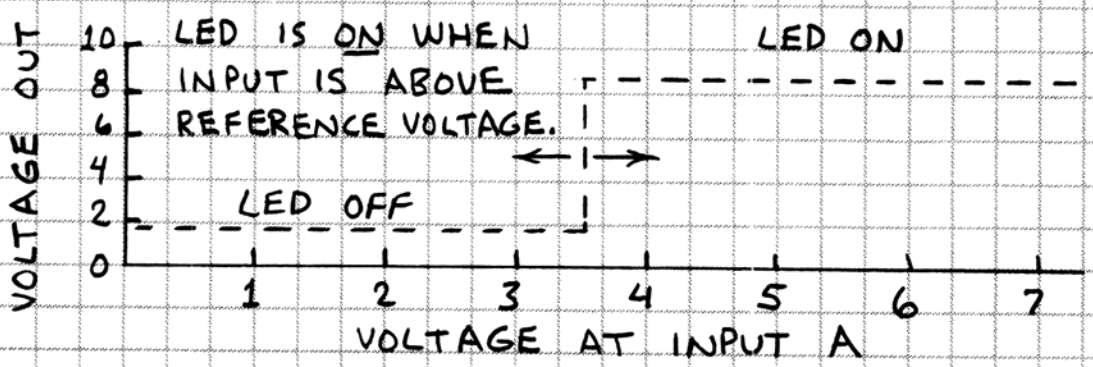

ANALOG PRESSURE SENSOR

PRESSURE SENSORS ARE EASILY MADE FROM SIMPLE MATERIALS. THIS ONE CHANGES THE RESISTANCE OF A POTENTIOMETER.

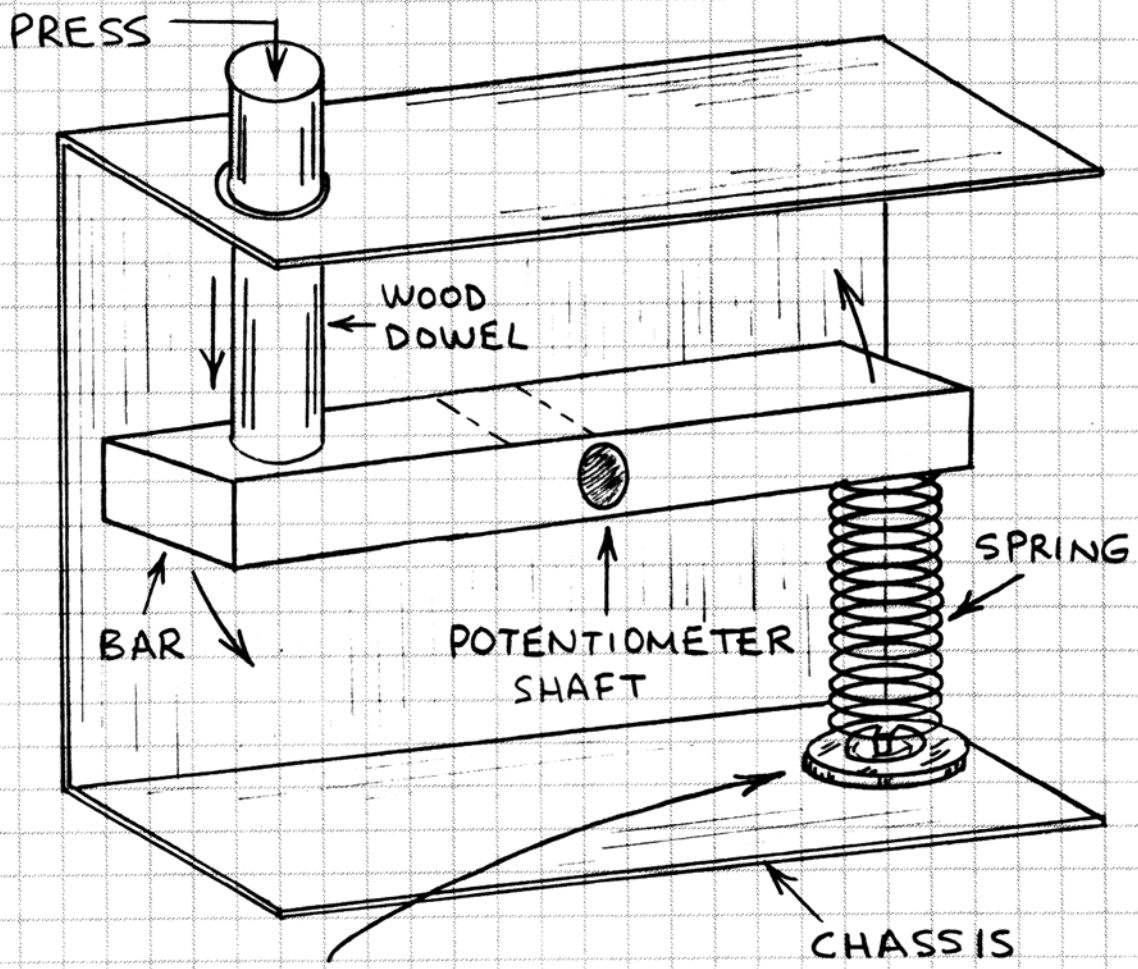

ATTACH SPRING TO BAR AND CHASSIS WITH SCREW, NUT AND WASHER.

MAKE BAR FROM WOOD OR PLASTIC. SECURE TO SHAFT OF POTENTIOMETER WITH CEMENT OR SET SCREW.

CHASSIS: USE ALUMINUM ENCLOSURE.

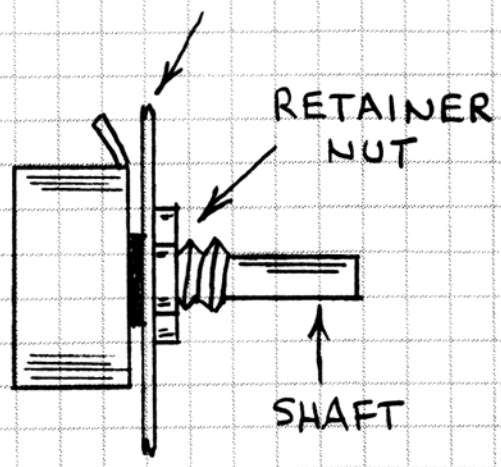

SIDE VIEW OF POTENTIOMETER INSTALLATION

SIMPLE PRESSURE SENSOR

THIS SIMPLE SENSOR DOES NOT PROVIDE THE CONSISTENCY OF A POTENTIOMETER, BUT IT IS VERY EASY TO MAKE.

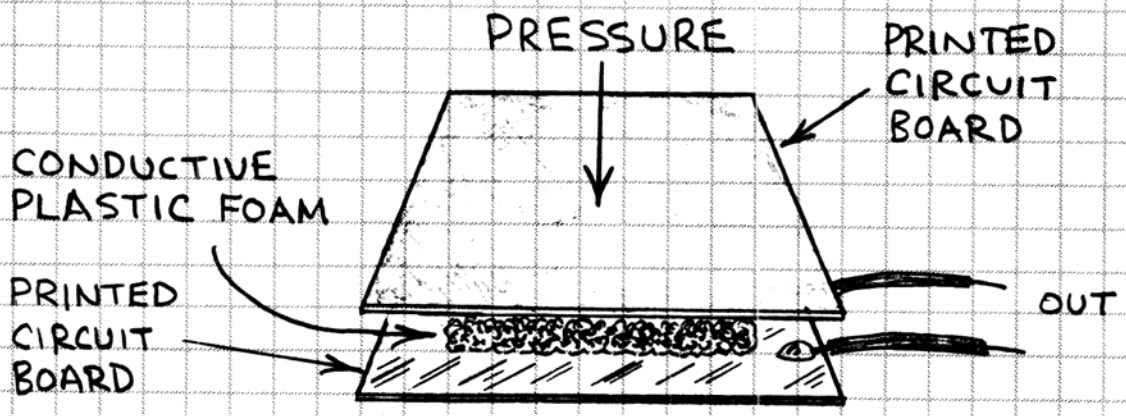

POLISH COPPER SIDE OF BOTH BOARDS. SOLDER CONNECTION WIRES TO EACH BOARD. THEN SANDWICH CONDUCTIVE PLASTIC FOAM (USED TO PROTECT ICs) BETWEEN COPPER SIDES OF THE BOARDS. PLACE SENSOR IN SMALL PLASTIC BOX TO HOLD IT TOGETHER.

PRESSURE-TO-VOLTAGE

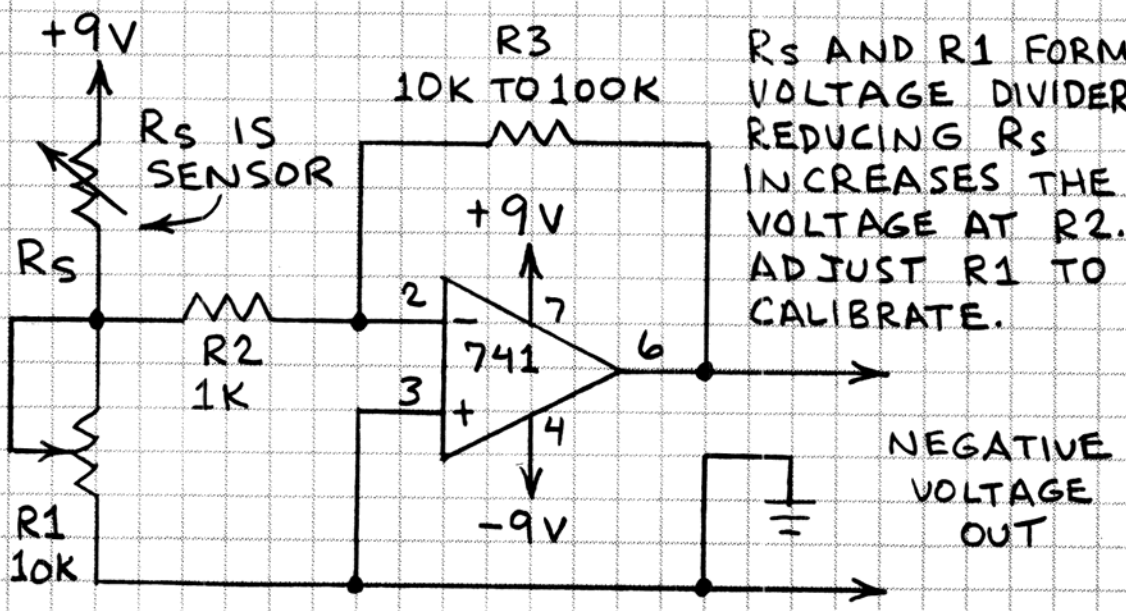

Rs AND R1 FORM VOLTAGE DIVIDER. REDUCING Rs INCREASES THE VOLTAGE AT R2. ADJUST R1 TO CALIBRATE.

EXPERIMENT WITH VALUES OF R1 AND R3 TO GIVE DESIRED OUTPUT. CONNECT Rs TO -9V TO GIVE POSITIVE VOLTAGE OUT.

STRAIN SENSORS

A STRAIN GAUGE IS A RESISTOR HAVING A RESISTANCE WHICH CHANGES WHEN THE RESISTOR IS BENT OR TWISTED. YOU CAN EASILY MAKE A WORKING STRAIN GAUGE.

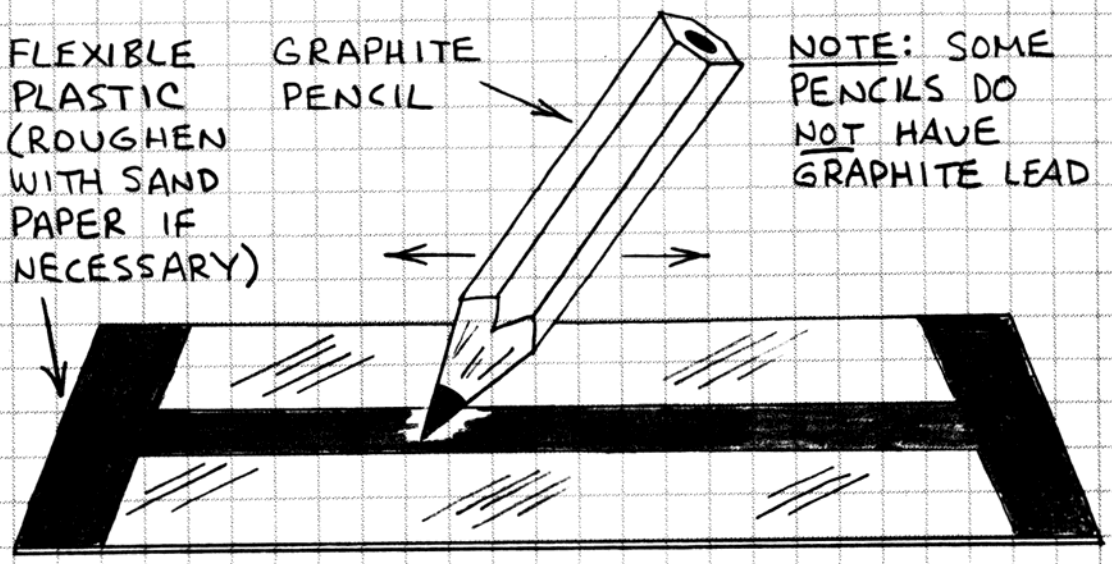

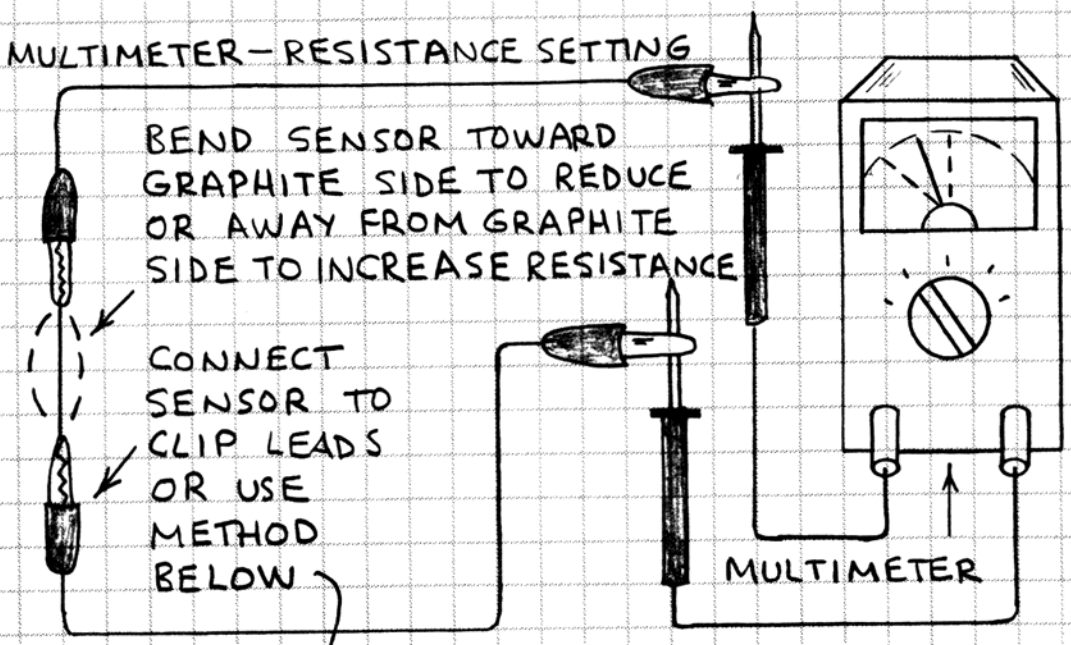

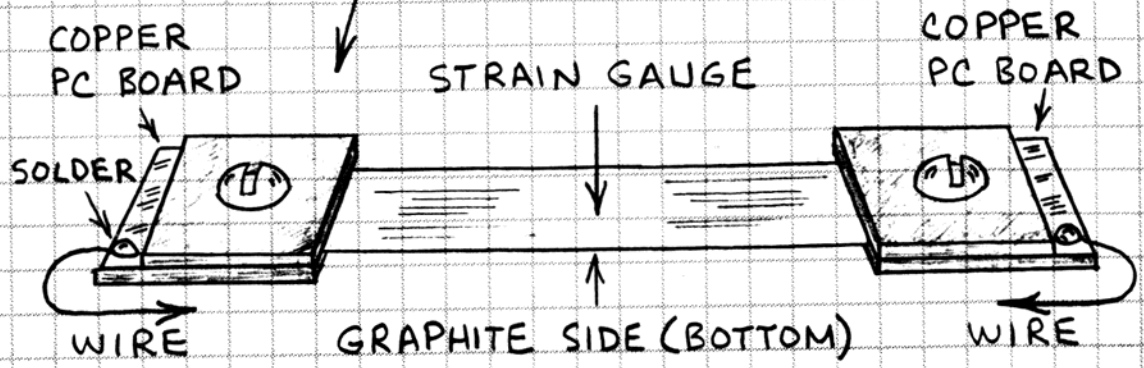

STRAIN SENSOR APPLICATIONS

MY FIRST STRAIN GAUGE PROJECT MONITORED THE MOVEMENT OF A MODEL ROCKET INSTALLED IN A WIND TUNNEL STRAPPED TO THE SIDE OF A 1966 CHEVY. IT WORKED. HERE ARE OTHER APPLICATIONS:

PRESSURE-SENSITIVE RESISTOR – USE STRAIN SENSOR TO CONTROL FREQUENCY OF AUDIO OSCILLATOR OR GAIN OF AMPLIFIER.

PRESSURE-SENSITIVE SWITCH – USE STRAIN SENSOR AS VERY SENSITIVE TOUCH SWITCH.

ACCELEROMETER – ATTACH WEIGHT TO ONE END OF STRAIN SENSOR. MOVEMENT WILL CHANGE RESISTANCE OF SENSOR.

SCALE – ATTACH STRAIN SENSOR TO BOTTOM SIDE OF FLEXIBLE PLATFORM. CALIBRATE BY PLACING ITEMS OF KNOWN WEIGHT ON PLATFORM.

EXPERIMENTAL – ROBOTICS AND DETECTION OF VIBRATION AND MOVEMENT.

STRAIN SENSOR DESIGNS

TRY THESE VARIATIONS TO INCREASE SENSITIVITY OR MAKE SINGLE-ENDED SENSORS.

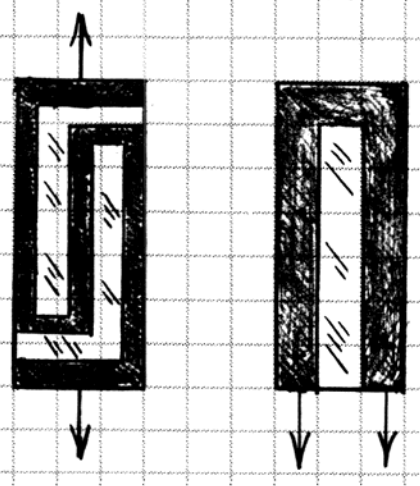

HIGH SENSITIVITY

SINGLE ENDED

CALIBRATE OR ADJUST RESISTANCE BY <u>LIGHTLY</u> STROKING PENCIL ERASER ACROSS GRAPHITE.

TRY COATING GRAPHITE WITH THIN LAYER OF PAINT TO PROTECT FROM UNWANTED CHANGES IN RESISTANCE.

STRAIN SENSOR RELAY

THIS CIRCUIT CAN BE ADJUSTED TO PULL IN A RELAY WHEN SENSOR IS BENT OR TWISTED.

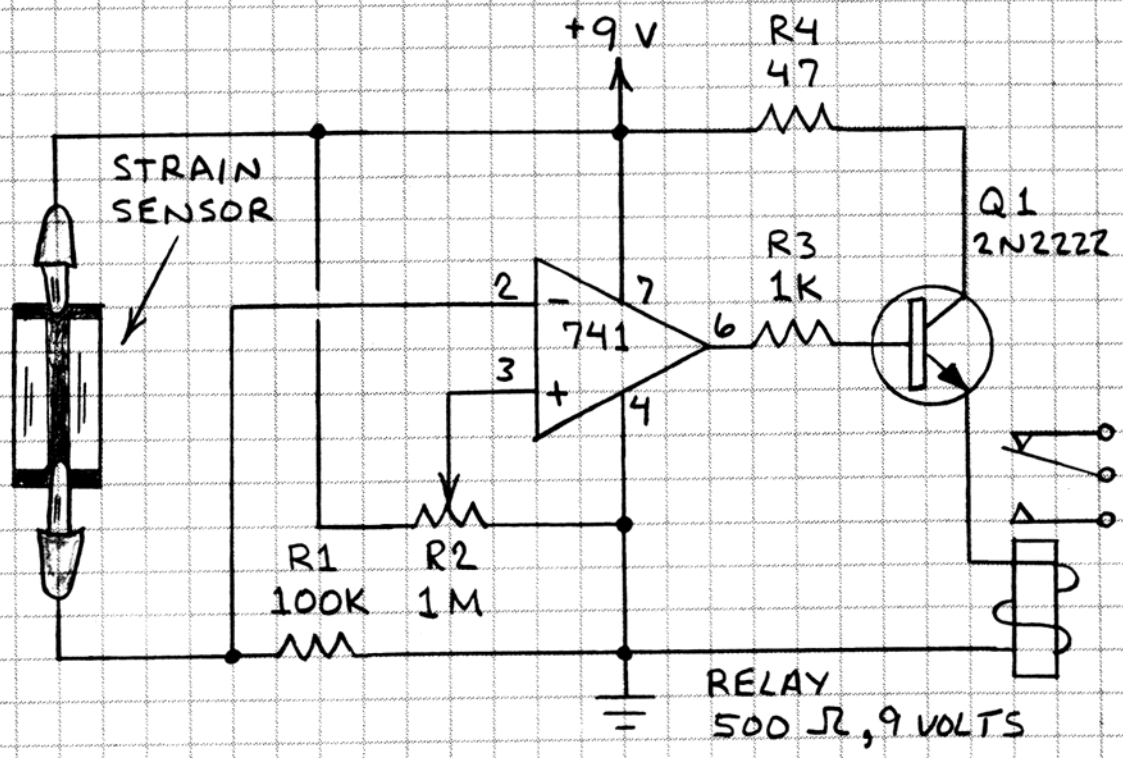

STRAIN SENSOR TONE GENERATOR

THE FREQUENCY OF THE TONE FROM THE SPEAKER CHANGES WHEN THE SENSOR IS BENT OR TWISTED.

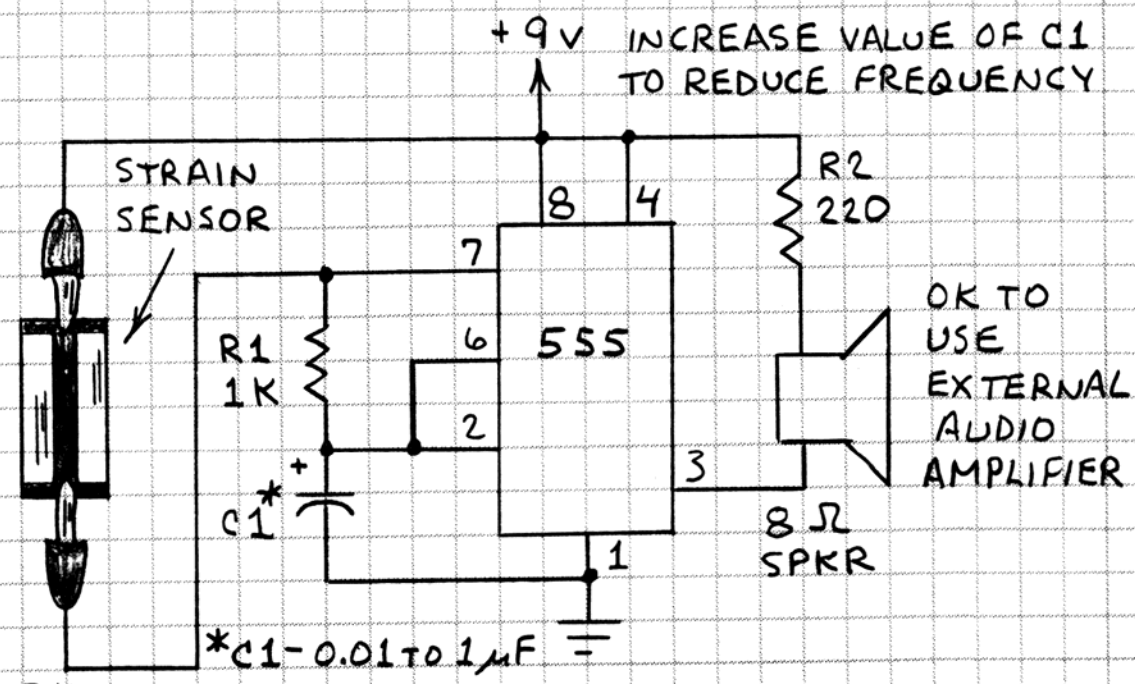

STRAIN SENSOR AMPLIFIER

THIS CIRCUIT CONVERTS THE CHANGE IN THE RESISTANCE OF A STRAIN SENSOR TO A CHANGE IN VOLTAGE.

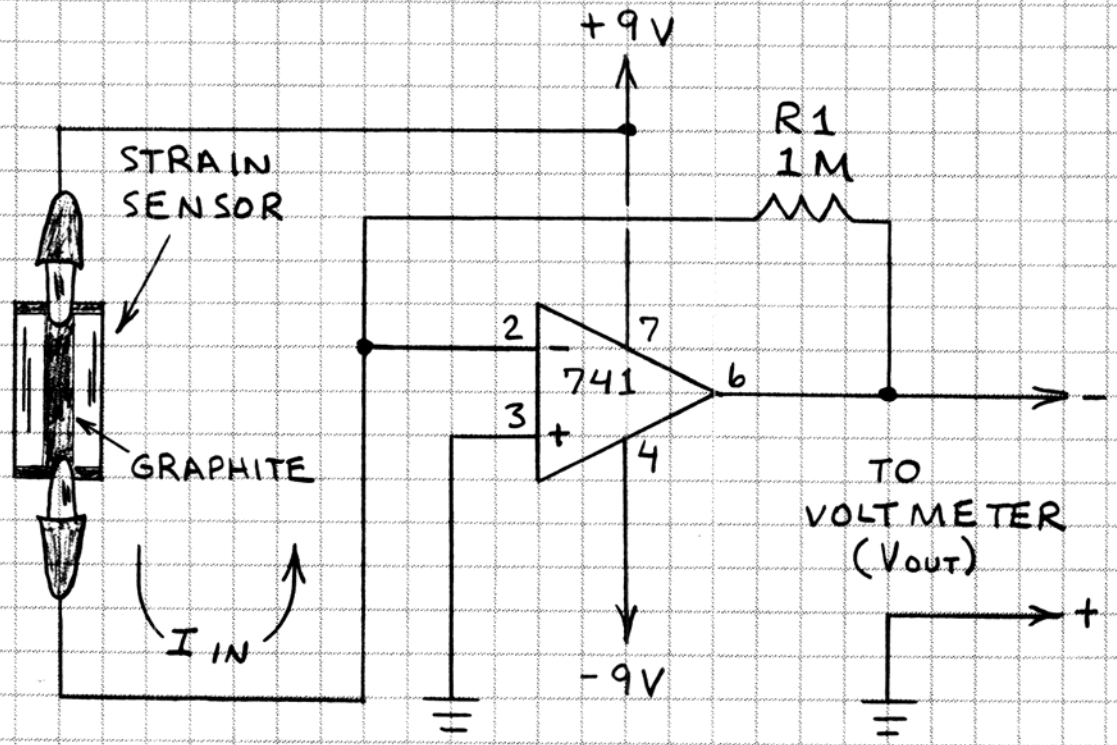

THIS CIRCUIT AMPLIFIES THE CURRENT THROUGH THE STRAIN SENSOR (I_{IN}) BY 1,000,000. IT IS THEREFORE <u>VERY</u> SENSITIVE. REDUCE RESISTANCE OF R1 TO REDUCE GAIN ($V_{OUT} = I_{IN} \times R1$).

RESULTS WITH TYPICAL STRAIN SENSOR (V_{OUT}):

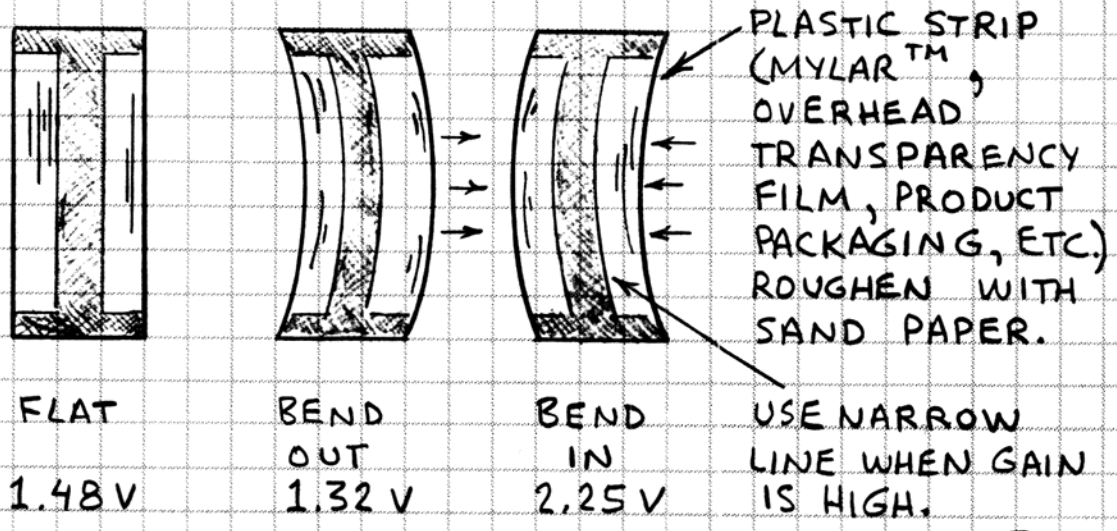

MAGNETIC FIELD SENSOR

A COMPASS IS A MAGNETIC FIELD SENSOR. A LIGHT SENSOR CAN DETECT TINY MOVEMENTS OF A COMPASS NEEDLE CAUSED BY ELECTRIC MOTORS, MAGNETS AND SOLAR ACTIVITY.

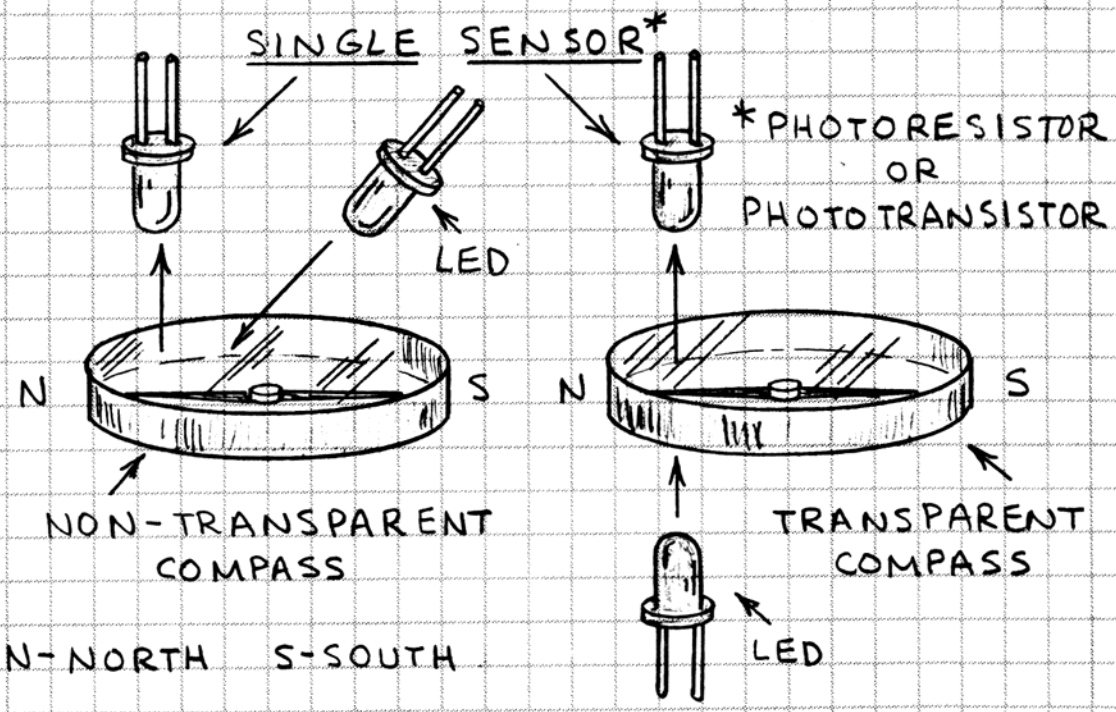

N-NORTH S-SOUTH

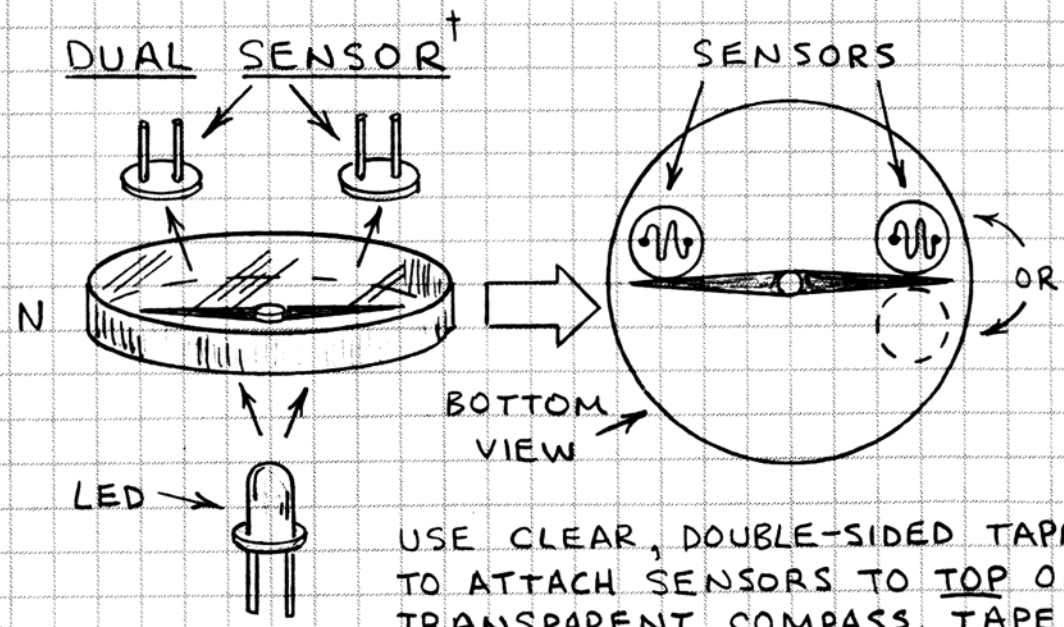

USE CLEAR, DOUBLE-SIDED TAPE TO ATTACH SENSORS TO TOP OF TRANSPARENT COMPASS. TAPE BLACK PAPER OVER SENSORS.

†PHOTORESISTORS

TEST BY PLACING COMPASS ON CLEAR BOX ON WHITE PAPER. ROOM LIGHT WILL BE REFLECTED UPWARD. INSTALL COMPASS AND LED IN LIGHT-TIGHT BOX.

MAGNETIC FIELD SWITCH

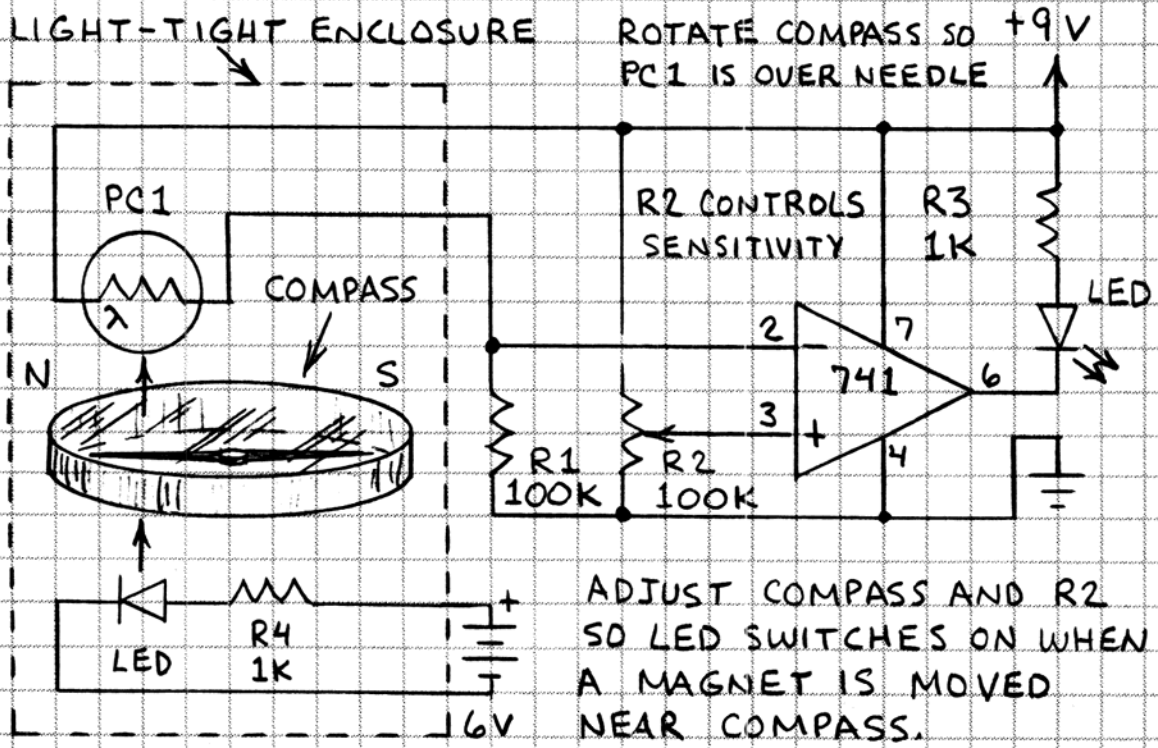

ADJUST COMPASS AND R2 SO LED SWITCHES ON WHEN A MAGNET IS MOVED NEAR COMPASS.

MAGNETIC FIELD AMPLIFIER

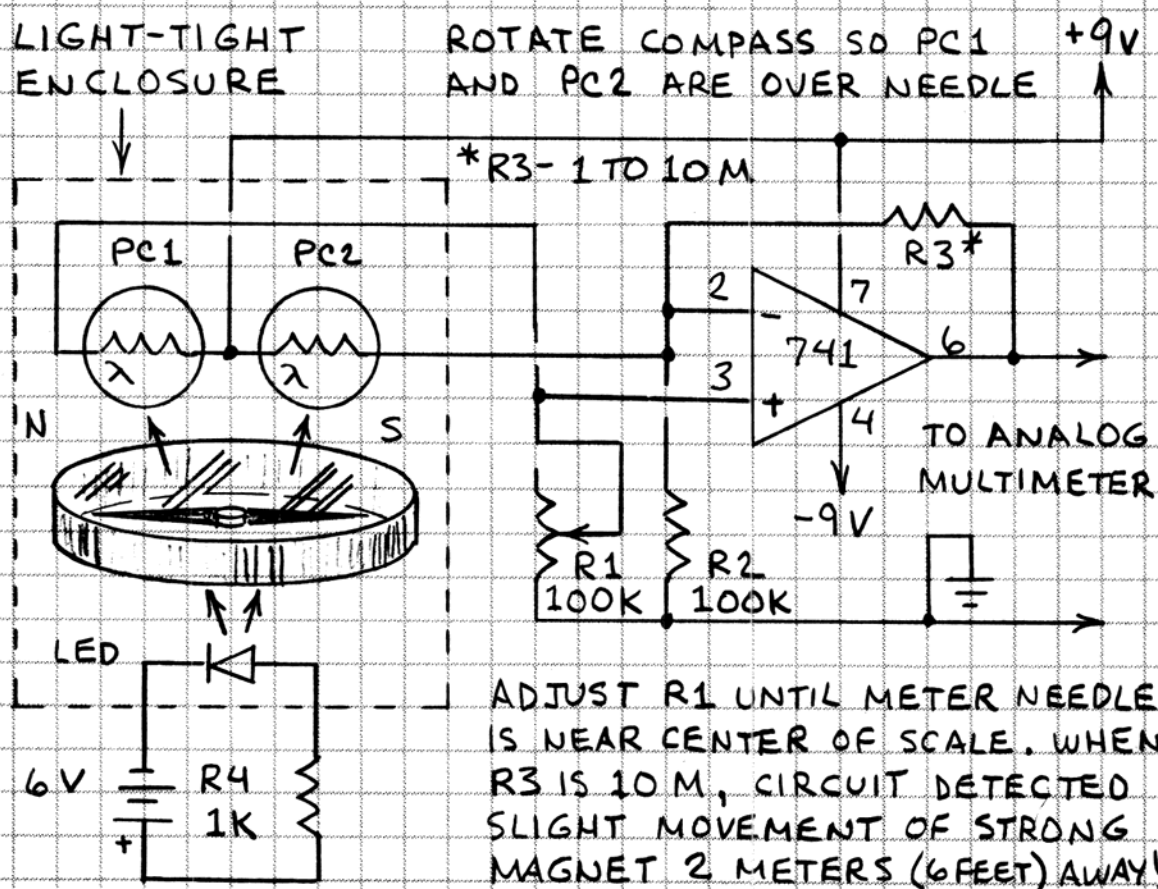

ADJUST R1 UNTIL METER NEEDLE IS NEAR CENTER OF SCALE. WHEN R3 IS 10 M, CIRCUIT DETECTED SLIGHT MOVEMENT OF STRONG MAGNET 2 METERS (6 FEET) AWAY!

VIDEO MONITOR SENSORS

TAPE A LIGHT-SENSITIVE PHOTORESISTOR, PHOTOTRANSISTOR OR SOLAR CELL TO THE SCREEN OF A VIDEO MONITOR. A SPOT OF LIGHT FLASHED ON THE SCREEN UNDER THE LIGHT SENSOR CAN THEN CONTROL A TONE GENERATOR, LIGHT OR RELAY. THUS LIGHT ON THE MONITOR'S SCREEN REPLACES CONNECTION WIRES BETWEEN THE MONITOR AND THE DEVICE BEING CONTROLLED.

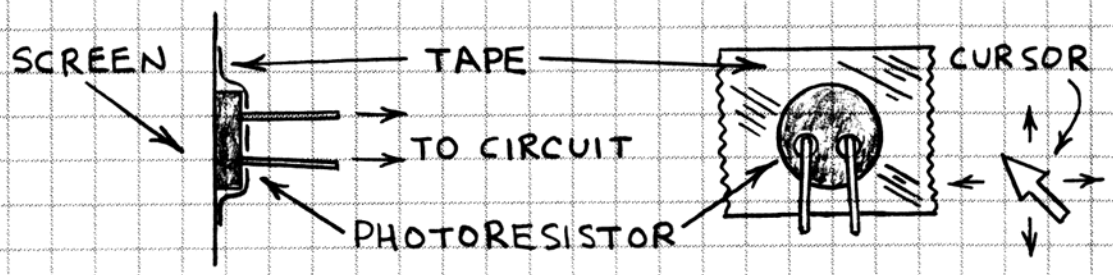

1. <u>BUSY SIGNAL</u> – WHEN A PROGRAM TAKES LOTS OF TIME TO CRUNCH DATA, USE THE MOUSE TO MOVE THE BUSY ICON (⧗) UNTIL IT IS UNDER A LIGHT SENSOR TAPED ON THE SCREEN. CONNECT THE SENSOR TO A TONE GENERATOR. A VERY DISTINCT CHANGE IN THE SOUND OF THE TONE WILL OCCUR WHEN THE BUSY ICON CHANGES TO THE CURSOR SYMBOL. THIS WILL ALLOW YOU TO DO SOMETHING ELSE WHILE YOU ARE WAITING FOR THE COMPUTER TO COMPLETE AN OPERATION.

2. <u>CONTROLLER</u> – WRITE PROGRAMS IN BASIC, QBASIC OR OTHER LANGUAGES THAT PLACE BLOCKS OF LIGHT ON A BLACK BACKGROUND DIRECTLY UNDER ONE OR MORE LIGHT SENSORS. THIS WILL ALLOW YOUR COMPUTER TO CONTROL EXTERNAL LIGHTS, SOUNDS AND RELAYS UNDER PROGRAM CONTROL.

3. <u>DRIVE SIGNAL</u> – TAPE A LIGHT SENSOR OVER THE INDICATOR LIGHT FOR A HARD DRIVE OR CD-ROM DRIVE. CONNECT THE SENSOR TO A TONE GENERATOR. EACH TIME THE DRIVE IS ACCESSED A TONE WILL SOUND.

4. VIDEO CAMERA – VIDEO CAMERAS ARE IDEAL FOR WATCHING A SLEEPING BABY OR A FRONT PORCH. BUT YOU MUST WATCH THE MONITOR TO KNOW WHEN SOMETHING HAS HAPPENED. TAPE ONE OR MORE LIGHT SENSORS TO THE PART OF THE SCREEN WHERE MOVEMENT OR CHANGES ARE MOST LIKELY TO OCCUR. THEN CONNECT THE SENSOR TO A THRESHOLD DETECTOR. WHEN THE IMAGE ON THE MONITOR CHANGES, A BUZZER WILL SOUND.

PLEASE NOTE – WHILE ALL THESE APPLICATIONS HAVE BEEN TESTED, THEY ARE EXPERIMENTAL. THE RESULTS YOU OBTAIN WILL BE SUBJECT TO INTERFERENCE FROM AMBIENT LIGHT AND TO HOW AND WHERE YOU ATTACH THE LIGHT SENSOR TO THE MONITOR.

VIDEO MONITOR TONE GENERATOR

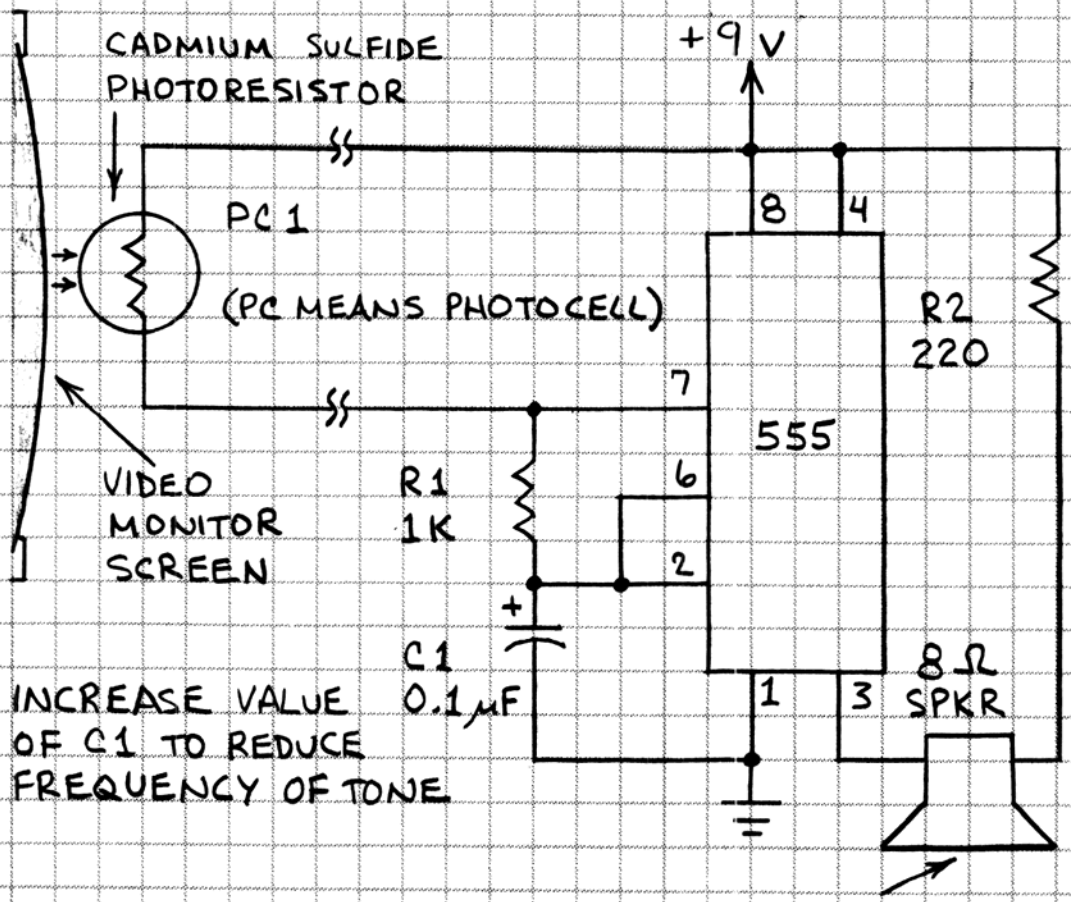

INCREASE VALUE OF C1 TO REDUCE FREQUENCY OF TONE

OK TO REPLACE SPEAKER WITH PIEZOELECTRIC BUZZER ELEMENT. (RED WIRE TO PIN 4 AND BLACK WIRE TO PIN 3.)

VIDEO MONITOR RELAY CIRCUITS

THESE CIRCUITS PROVIDE A SIMPLE MEANS FOR CONTROLLING EXTERNAL DEVICES WITH A VIDEO MONITOR.

LIGHT-ACTIVATED RELAY

RELAY DROPS OUT WHEN SCREEN AT PC1 IS BRIGHT.

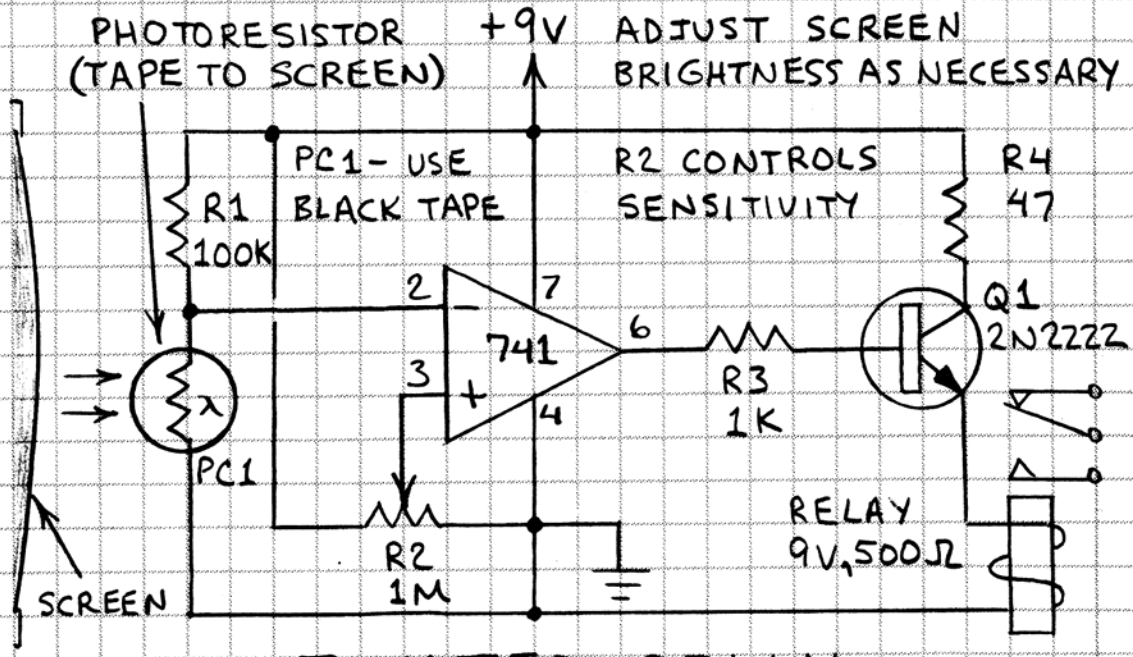

DARK-ACTIVATED RELAY

RELAY PULLS IN WHEN SCREEN AT PC1 IS DARK.

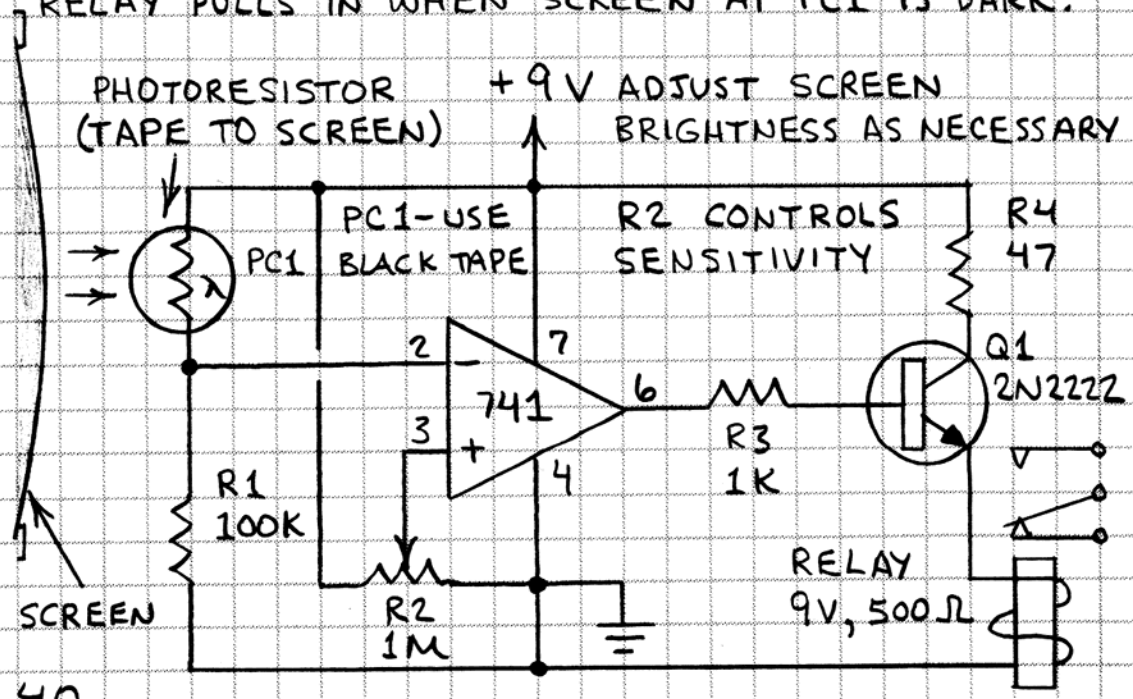

IMPROVED VIDEO MONITOR RELAY

THIS CIRCUIT USES DUAL PHOTORESISTORS TO PROVIDE DIFFERENTIAL OPERATION. CHANGES IN ROOM LIGHTING CAUSE THE SAME RESISTANCE CHANGE IN BOTH PHOTORESISTORS, THUS THEY CANCEL ONE ANOTHER. ONLY WHEN PC1 RECEIVES MORE LIGHT THAN PC2 IS THE CIRCUIT UNBALANCED AND THE RELAY ACTUATED.

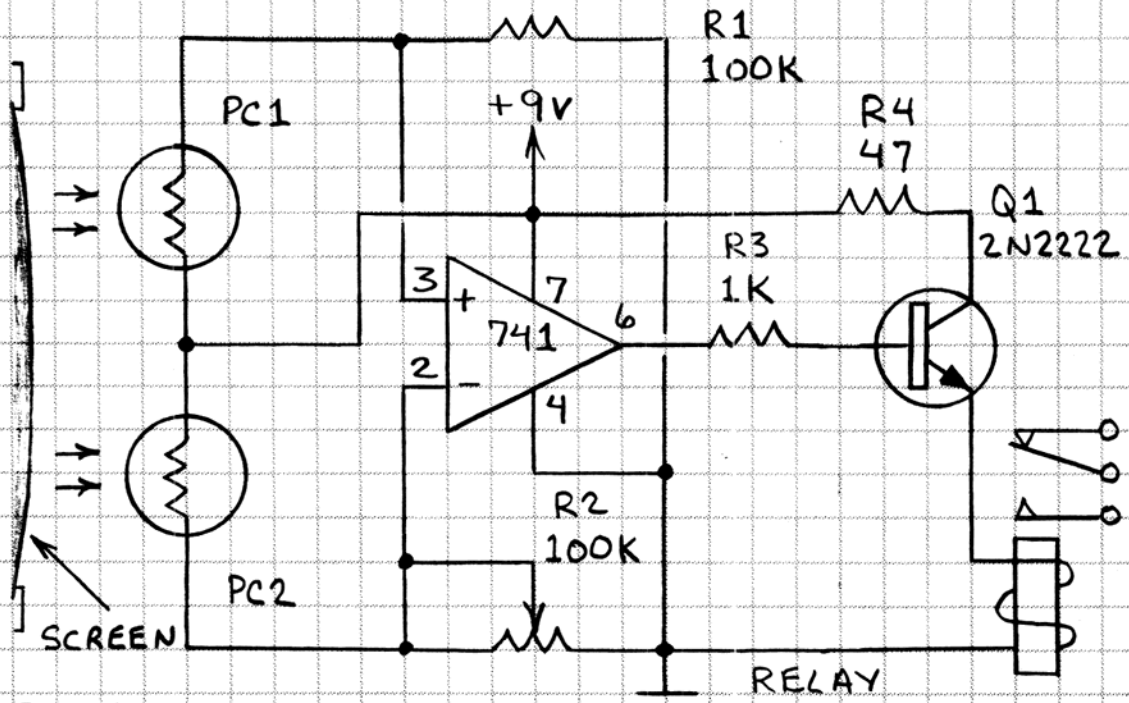

PC1 & 2 – PHOTORESISTORS

ADJUST R2 TO CONTROL SWITCHING THRESHOLD.

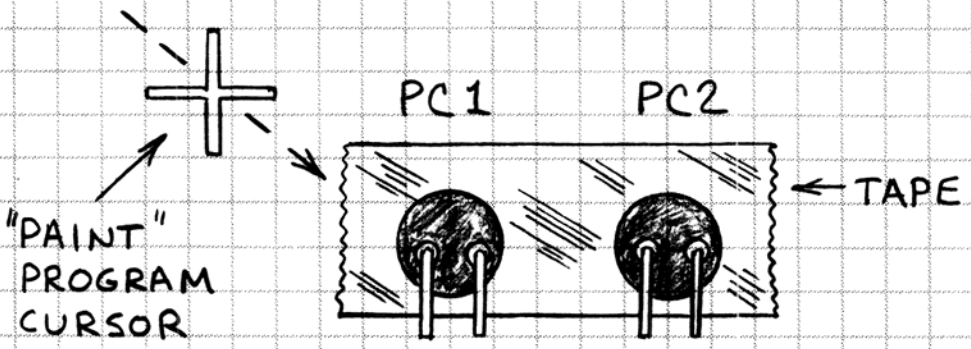

THIS CIRCUIT EASILY RESPONDS TO VARIOUS CURSORS GENERATED BY TYPICAL PAINT PROGRAMS. THE PROTOTYPE COULD BE SET (VIA R2) TO ACTUATE THE RELAY WHEN THE TEXT CURSOR IN MICROSOFT™ PAINTBRUSH APPROACHED PC1 (WHITE ON BLACK).

VIDEO MONITOR SENSOR PROGRAMS

HERE ARE SOME SIMPLE PROGRAMS THAT DEMONSTRATE HOW A COMPUTER CAN CONTROL EXTERNAL DEVICES VIA ONE OR MORE LIGHT SENSORS THAT RECEIVE PROGRAMMED FLASHES OF LIGHT FROM THE MONITOR'S SCREEN.

THIS QBASIC PROGRAM PLACES AN "X" AT THE SAME PLACE ON THE SCREEN FOR 10 ON-OFF CYCLES:

```
REM  X ON  X OFF  DEMO
CLS
FOR  A = 1 TO 10
LOCATE 20, 50 : PRINT "X"
FOR  N = 1 TO 1000 : NEXT  N
LOCATE 20, 50 : PRINT " "
FOR  N = 1 TO 1000 : NEXT  N
NEXT A
END
```

HOW THIS PROGRAM WORKS:

<u>FOR A = 1 TO 10</u> CONTROLS NUMBER OF ON-OFF CYCLES. FOR EXAMPLE, CHANGE 10 TO 100 FOR 100 CYCLES.

<u>LOCATE 20, 50: PRINT "X"</u> PLACES AN "X" AT ROW 20, COLUMN 50. A TYPICAL MONITOR HAS 25 ROWS AND 80 COLUMNS. YOU CAN PLACE THE "X" ANYWHERE WITHIN THIS RANGE.

<u>FOR N = 1 TO 1000 : NEXT N</u> DETERMINES HOW LONG THE "X" STAYS ON AND OFF. INCREASE THE SECOND NUMBER TO INCREASE THE DELAY.

FOR FLASHING CURSOR, CHANGE LOCATE STATEMENTS:

```
LOCATE  20, 50, 1 , 0, 7   (CURSOR ON)
   :
LOCATE  20, 50, 1 , 1, 0   (CURSOR OFF)
```

THIS PROGRAM ALTERNATELY FLASHES AN "X" AT TWO ADJACENT LOCATIONS TO CONTROL TWO LIGHT SENSORS.

```
REM  DUAL FLASHER ROUTINE
CLS
FOR A = 1 TO 10
LOCATE 20, 50 : PRINT "X"
LOCATE 20, 40 : PRINT "  "
FOR N = 1 TO 1000 : NEXT N
LOCATE 20, 50 : PRINT "  "
LOCATE 20, 40 : PRINT "X"
FOR N = 1 TO 1000 : NEXT N
NEXT A
END
```

NOTE: THIS PROGRAM AND THE ONE ON FACING PAGE WILL WORK WITH BASIC IF YOU PLACE A CONSECUTIVE NUMER BEFORE EACH LINE. (TRY 10, 20, 30, ETC. SO YOU CAN INSERT NEW LINES LATER.)

MODIFYING THE SCREEN SYMBOL

LOCATE IS THE SIMPLEST COMMAND FOR PLACING A CHARACTER AT A DESIRED PLACE ON THE SCREEN. IF "X" OR OTHER KEYBOARD CHARACTERS DO NOT PROVIDE ENOUGH LIGHT OR CONTRAST TO ACTIVATE YOUR SENSOR, INCREASE THE SCREEN BRIGHTNESS OR TRY USING AN ASCII CHARACTER ACCESSED BY THE CHR$ STATEMENT. FOR EXAMPLE:

```
LOCATE 20, 20 : PRINT CHR$(178)
```

PLACES A WHITE BOX ON THE SCREEN. OTHER SUITABLE ASCII SYMBOLS INCLUDE:

▯ - 176	| - 179	‡ - 216	□ - 220	○ - 249
▯ - 177	+ - 197	▯ - 219	□ - 223	• - 250

SEE PROGRAM MANUALS FOR COMPLETE LIST.

LIGHTNING SENSOR

USE THIS CIRCUIT TO DETECT DISTANT FLASHES OF LIGHTNING.

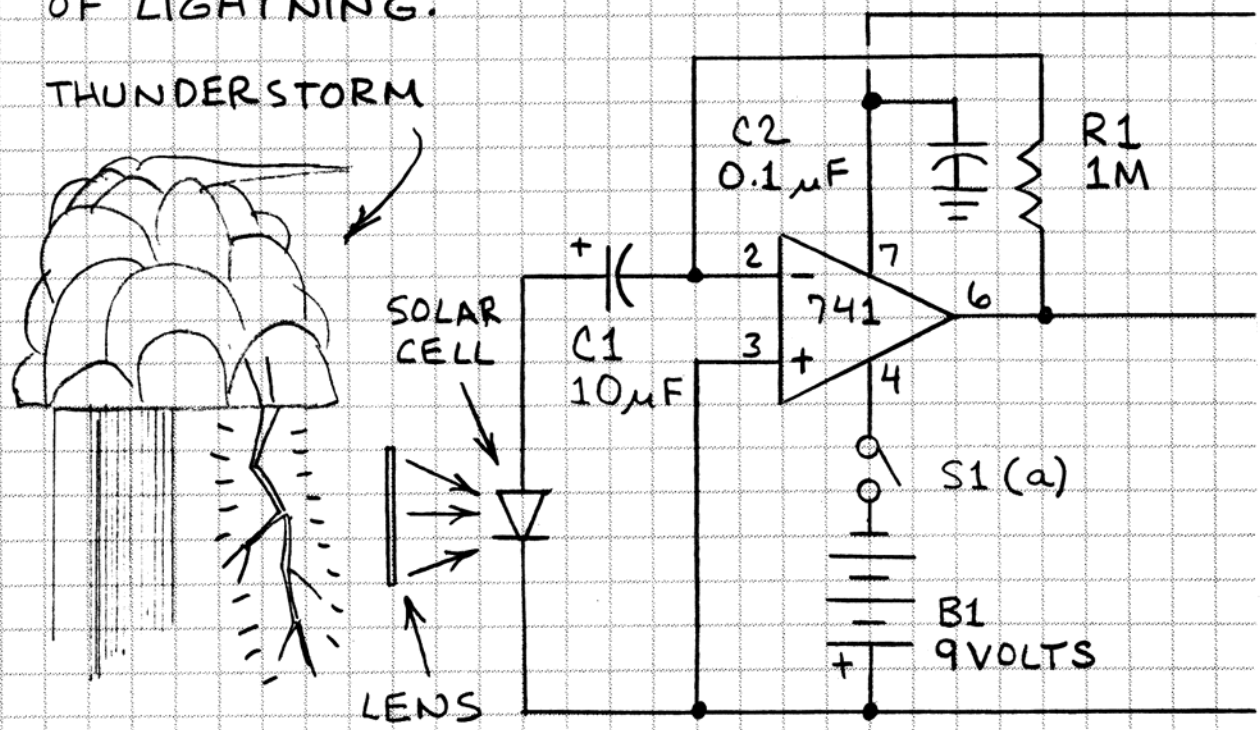

SINCE A LIGHTNING BOLT IS A GIANT RADIO TRANSMITTER, A TRANSISTOR RADIO CAN DETECT LIGHTNING. BUT THE POPS AND CRACKLES YOU HEAR DO NOT REVEAL THE DIRECTION OF THE LIGHTNING. THIS CIRCUIT INDICATES THE GENERAL DIRECTION OF LIGHTNING BOLTS DURING THE DAY WHEN IT MAY BE TOO BRIGHT TO SEE THE FLASHES. AT NIGHT IT WILL DETECT DISTANT LIGHTNING THAT MAY BE TOO FAINT TO SEE.

FOR BEST RESULTS MOUNT THE SOLAR CELL BEHIND A MAGNIFYING LENS. A LARGE PLASTIC FRESNEL LENS SUCH AS THE FLAT PLASTIC LENSES SOLD AS PAGE MAGNIFIERS WORKS WELL. THE LENS WILL COLLECT MUCH MORE LIGHT THAN THE SOLAR CELL ALONE AND IT WILL MAKE THE SENSOR VERY DIRECTIONAL.

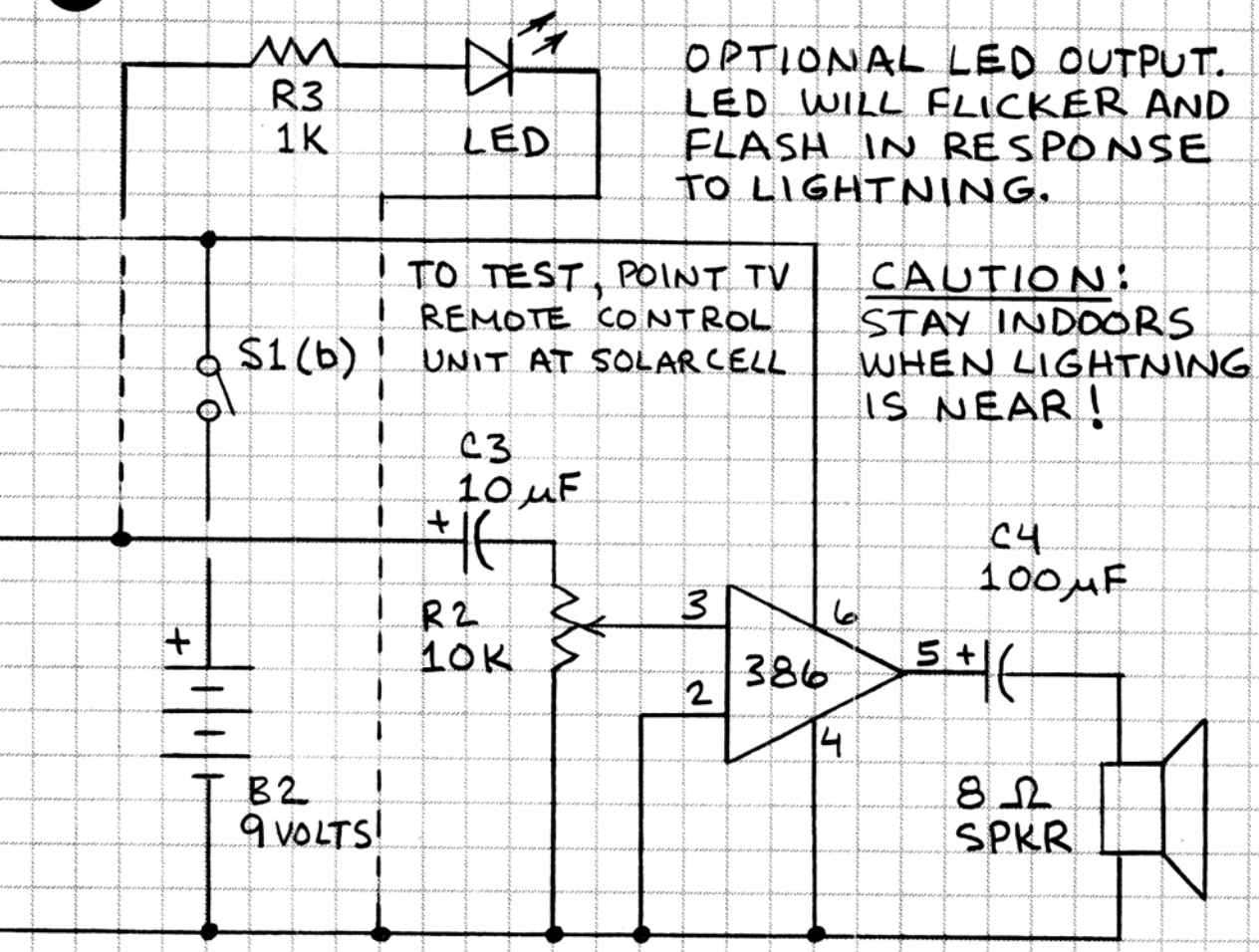

TO MAKE A DIRECTIONAL LIGHTNING SENSOR, CEMENT A SOLAR CELL TO THE INSIDE OF EACH SIDE OF A CLEAR SQUARE PLASTIC BOX. ASSEMBLE FOUR SENSOR CIRCUITS WITH AN LED OUTPUT (LESS 386 AUDIO OUTPUT STAGE) ON A CIRCUIT BOARD AND INSTALL BOARD AND BATTERY INSIDE THE PLASTIC BOX. SELECT A DIFFERENT COLOR (RED, YELLOW, ORANGE AND GREEN) FOR EACH LED. INSTALL THE LEDs ON THE SAME SIDE OF THE BOX SO THEY CAN BE SEEN FROM A DISTANCE. MARK EACH SIDE OF THE BOX WITH THE FOUR COMPASS DIRECTIONS (NORTH, EAST, SOUTH AND WEST) AND NOTE THE LED COLOR FOR EACH DIRECTION. PLACE THE SENSOR IN AN OPEN FIELD SO THAT ITS NORTH SIDE FACES NORTH AND WHERE YOU CAN SEE IT FROM INSIDE YOUR HOUSE. COLOR OF FLASHING LED OR LEDs WILL INDICATE THE APPROXIMATE DIRECTION OF LIGHTNING BOLTS.

INFRARED SENSOR

A THERMISTOR IS A TEMPERATURE-SENSITIVE RESISTOR. INSTALL A THERMISTOR AT THE FOCAL POINT OF A FLASHLIGHT REFLECTOR TO DETECT INFRARED RADIATION FROM HEAT SOURCES.

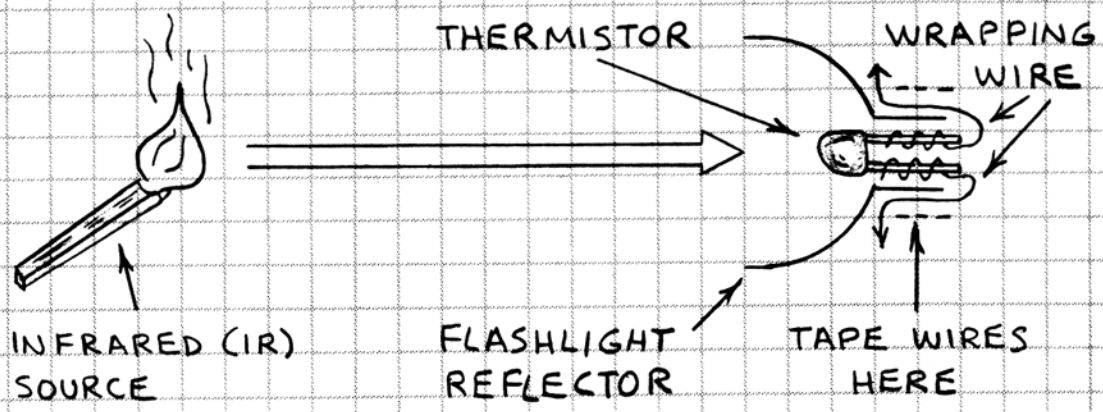

INFRARED SWITCH

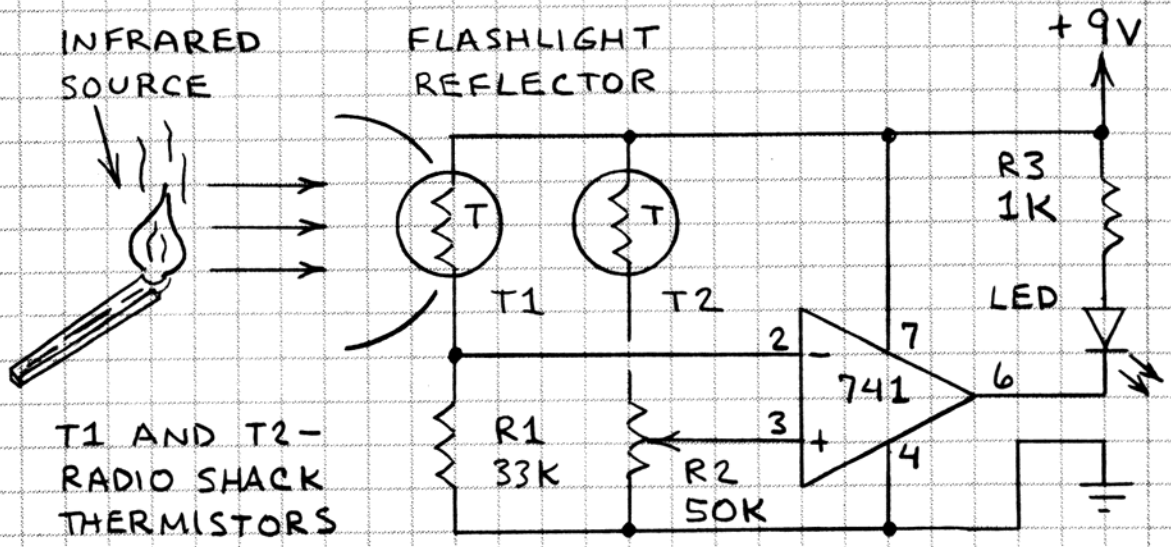

CONNECT BATTERY AND WAIT SEVERAL SECONDS TO ALLOW THERMISTORS TO STABILIZE. ADJUST R2 UNTIL LED JUST SWITCHES OFF. PLACE YOUR HAND NEAR REFLECTOR AND LED SHOULD TURN ON. A MATCH WILL TRIGGER THE CIRCUIT FROM UP TO 1 METER (ABOUT 3 FEET) OR MORE. NOTE THAT CHANGES IN AIR TEMPERATURE CAUSE EQUAL CHANGES IN T1 AND T2. BUT AN INFRARED SOURCE AFFECTS ONLY T1. TO ADD RELAY SEE SIMILAR CIRCUITS IN THIS BOOK.

INFRARED AMPLIFIER

THIS CIRCUIT WILL INDICATE THE PRESENCE OF A FLAME OR HOT SOLDERING IRON. THE OUTPUT VOLTAGE (V_{OUT}) INCREASES AS INFRARED INCREASES.

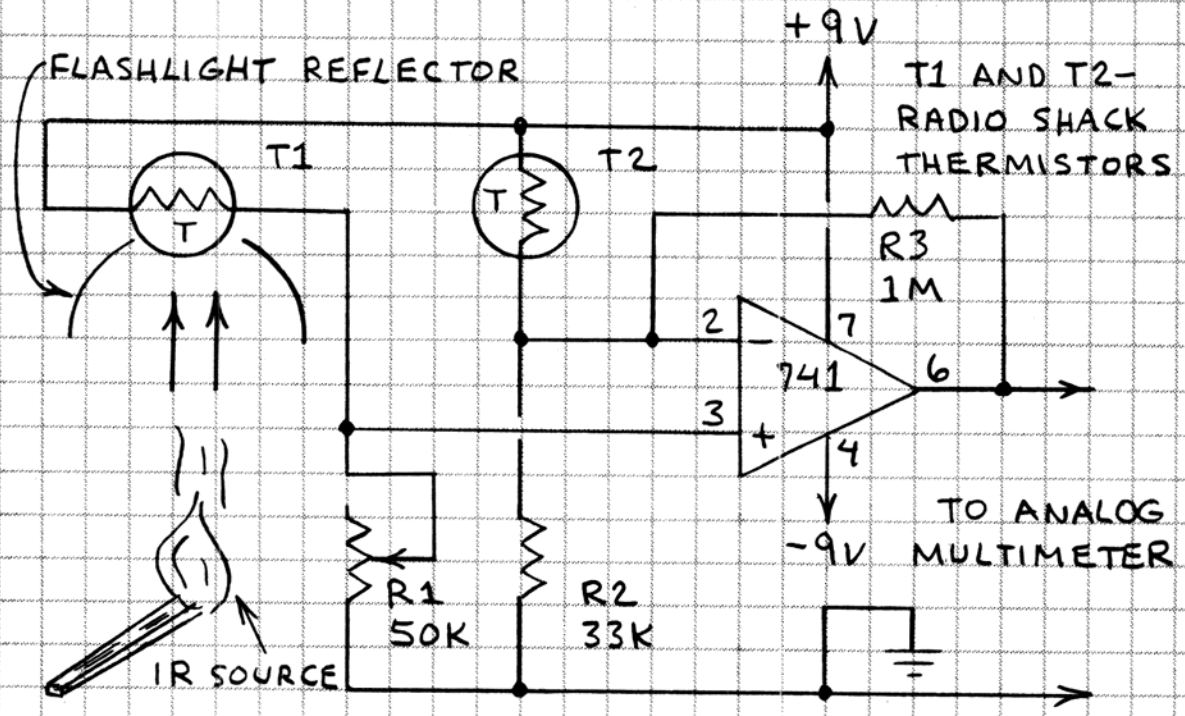

SET MULTIMETER TO 0-5 OR 0-10 VOLTS DC. ADJUST R1 UNTIL METER NEEDLE IS NEAR CENTER OF METER SCALE. AN INFRARED SOURCE WITHIN FIELD OF VIEW OF REFLECTOR WILL CAUSE THE METER NEEDLE TO DEFLECT UPWARD (TO RIGHT). REMOVE IR SOURCE AND THE METER NEEDLE WILL MOVE DOWNWARD (TO LEFT). CORRECT ALIGNMENT OF T1 INSIDE THE REFLECTOR IS IMPORTANT.

REFLECTOR ALIGNMENT

THERMISTOR MUST BE AT REFLECTOR FOCAL POINT. THE FOCAL POINT IS WHERE FILAMENT OF FLASHLIGHT BULB WOULD BE. LOOK INTO REFLECTOR AND SEE

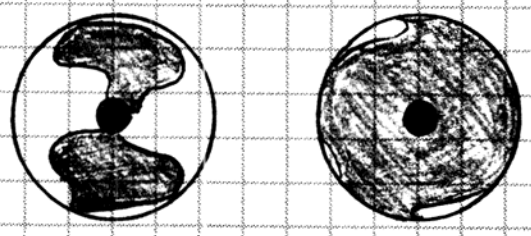

MISALIGNED ALIGNED

POLARIZED LIGHT

WAVES OF ORDINARY LIGHT VIBRATE IN MANY DIRECTIONS. LIGHT WAVES THAT TRAVEL TO YOUR EYES FROM THE CIRCLE BELOW VIBRATE LIKE THIS:

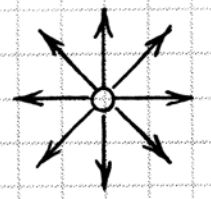

UNPOLARIZED LIGHT

RAYS OF REFLECTED LIGHT AND LIGHT THAT PASSES THROUGH SOME MATERIALS VIBRATE IN ONLY SOME DIRECTIONS. IF THEY VIBRATE IN ONLY ONE DIRECTION, THE LIGHT IS <u>POLARIZED</u>:

POLARIZED LIGHT

SUNLIGHT REFLECTED FROM WATER, ICE, GLASS AND METAL IS PARTIALLY OR EVEN COMPLETELY POLARIZED. SUNGLASSES WITH POLARIZING LENSES BLOCK THE GLARE OF REFLECTED SUNLIGHT, WHICH MAKES THEM POPULAR WITH PEOPLE WHO FISH OR SKI. THE SKY 90° AWAY FROM THE SUN IS PARTIALLY POLARIZED. YOU CAN SEE THIS YOURSELF WITH THE HELP OF POLARIZED SUNGLASSES.

THE MOST POLARIZED SECTION OF THE SKY APPEARS AS A DARK BAND WHEN VIEWED THROUGH POLARIZED SUNGLASSES. WITH YOUR BACK TO THE SUN, LOOK AT THE SKY 90° AWAY FROM THE SUN TO SEE THIS: THE POLARIZED BAND IS BEST SEEN NEAR SUNRISE OR SUNSET WHEN IT IS STRAIGHT OVER HEAD AND FORMS A NEARLY NORTH-SOUTH BAND.

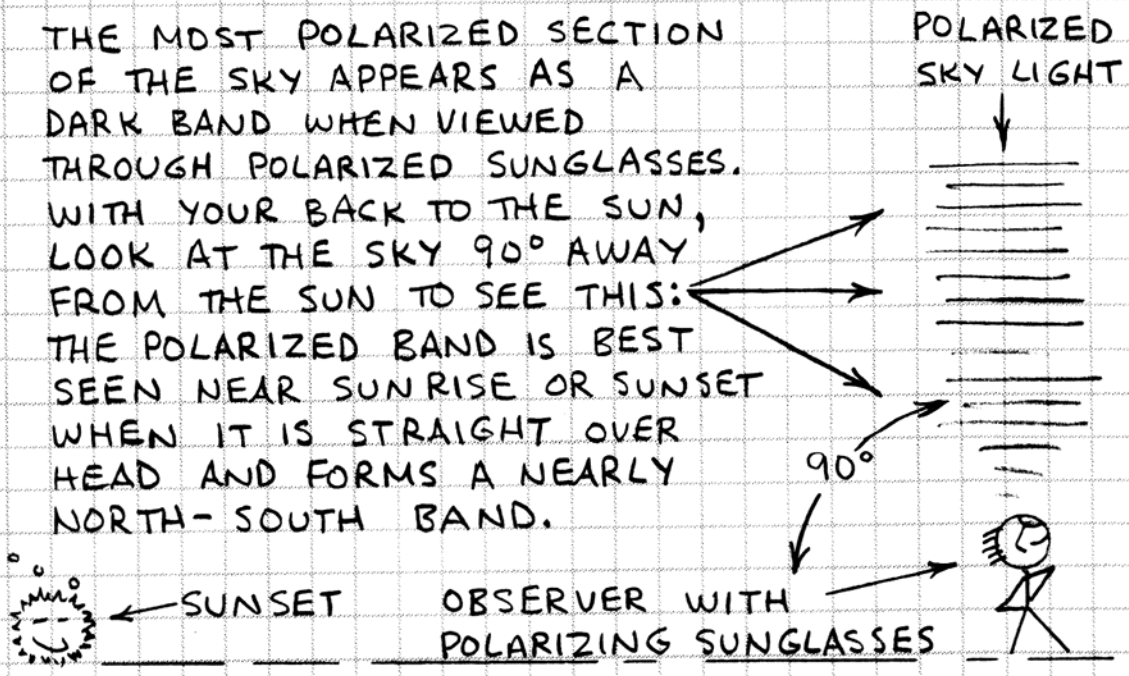

POLARIZED LIGHT SENSOR

POLARIZING FILTERS ARE AVAILABLE FROM CAMERA AND SCIENCE STORES. OR USE LENSES FROM INEXPENSIVE POLARIZING SUNGLASSES. CROSSING TWO POLARIZERS BLOCKS MOST LIGHT.

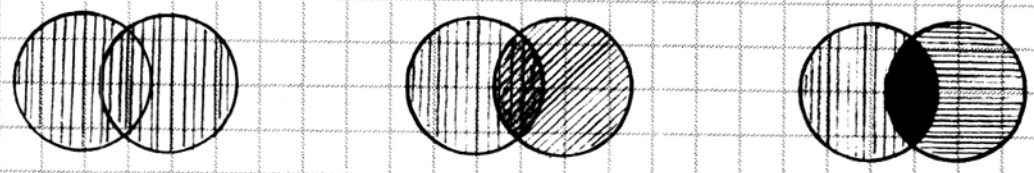

UNCROSSED PARTIALLY CROSSED CROSSED

THIS PRINCIPLE CAN BE USED TO MAKE SENSORS WHICH IGNORE ORDINARY LIGHT WHILE RESPONDING TO POLARIZED LIGHT.

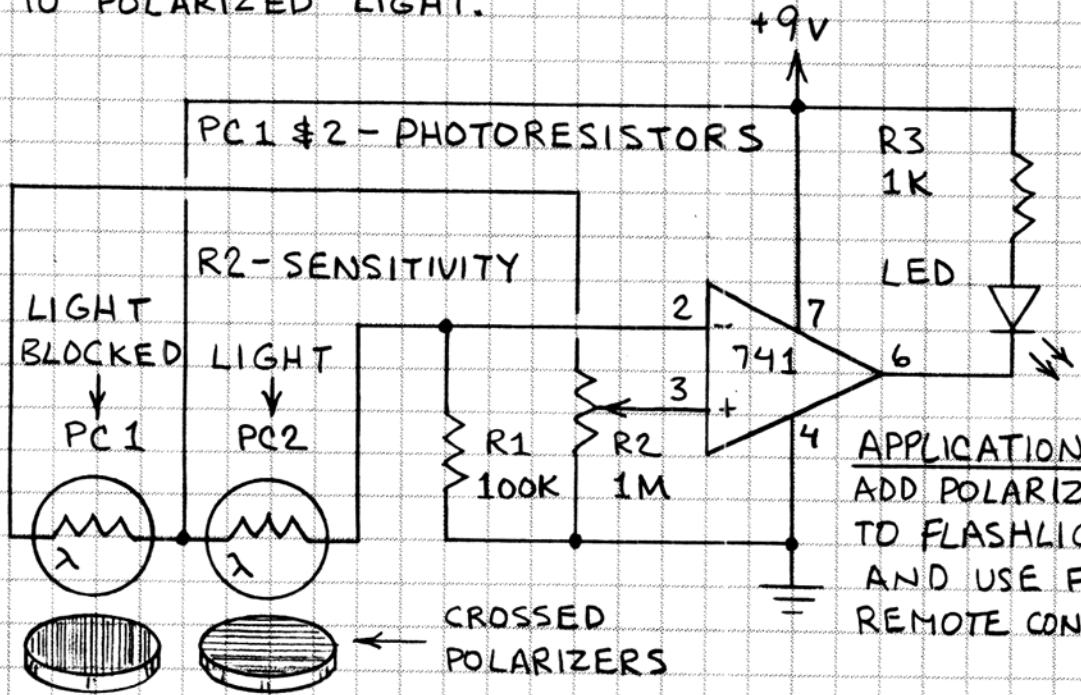

APPLICATION: ADD POLARIZER TO FLASHLIGHT AND USE FOR REMOTE CONTROL.

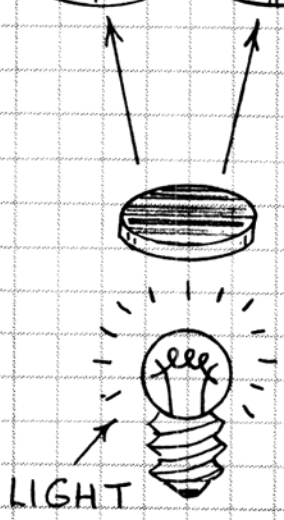

WHEN THE LIGHT LEVEL AT BOTH LIGHT SENSORS IS EQUAL THE LED IS OFF. WHEN THE LIGHT IS PARTIALLY OR COMPLETELY POLARIZED SO THAT PC1 RECEIVES MORE LIGHT THAN PC2, THE COMPARATOR WILL SWITCH THE LED ON. SEE ELSEWHERE IN THIS BOOK FOR HOW TO ADD A RELAY TO CIRCUIT.

INTEGRATED LIGHT SENSORS

INTEGRATED LIGHT SENSORS COMBINE A LIGHT-SENSITIVE PHOTODIODE AND AMPLIFIER OR OSCILLATOR IN A MINIATURE PACKAGE WITH A BUILT-IN WINDOW OR LENS. SOME ARE ENCAPSULATED IN DYED PLASTIC THAT TRANSMITS NEAR INFRARED WHILE BLOCKING VISIBLE LIGHT.

LIGHT-TO-TONE SENSOR

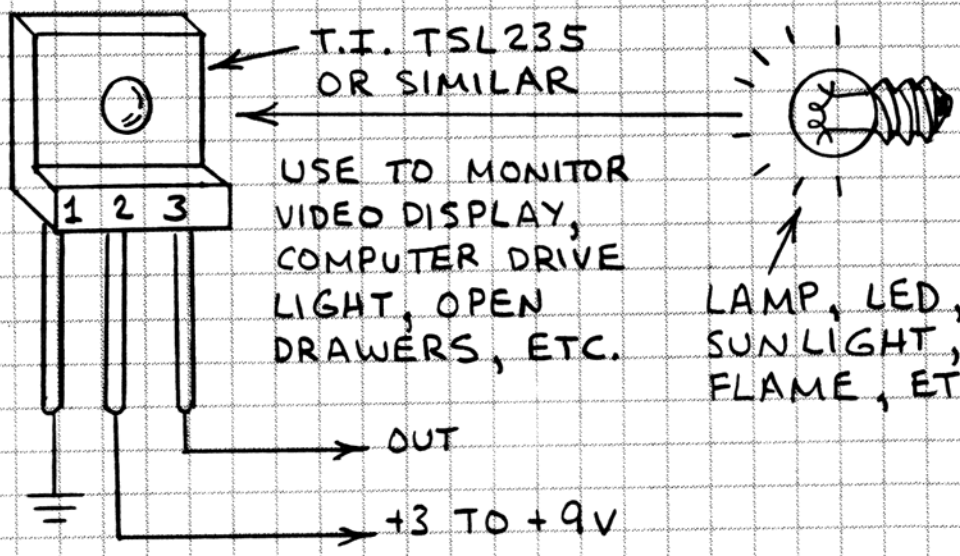

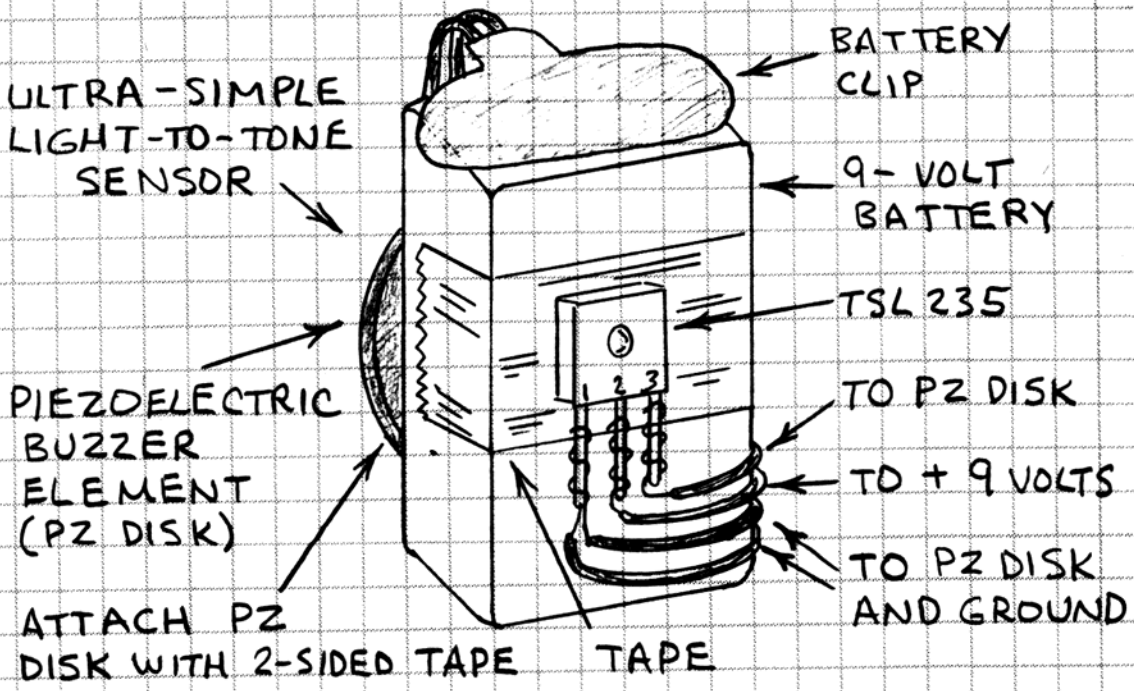

DARK TAPE ON TSL235 WILL REDUCE SENSITIVITY.

IR REMOTE CONTROL SENSOR

LED WILL GLOW OR PULSATE IF IR REMOTE CONTROL TRANSMITTER IS TRANSMITTING.

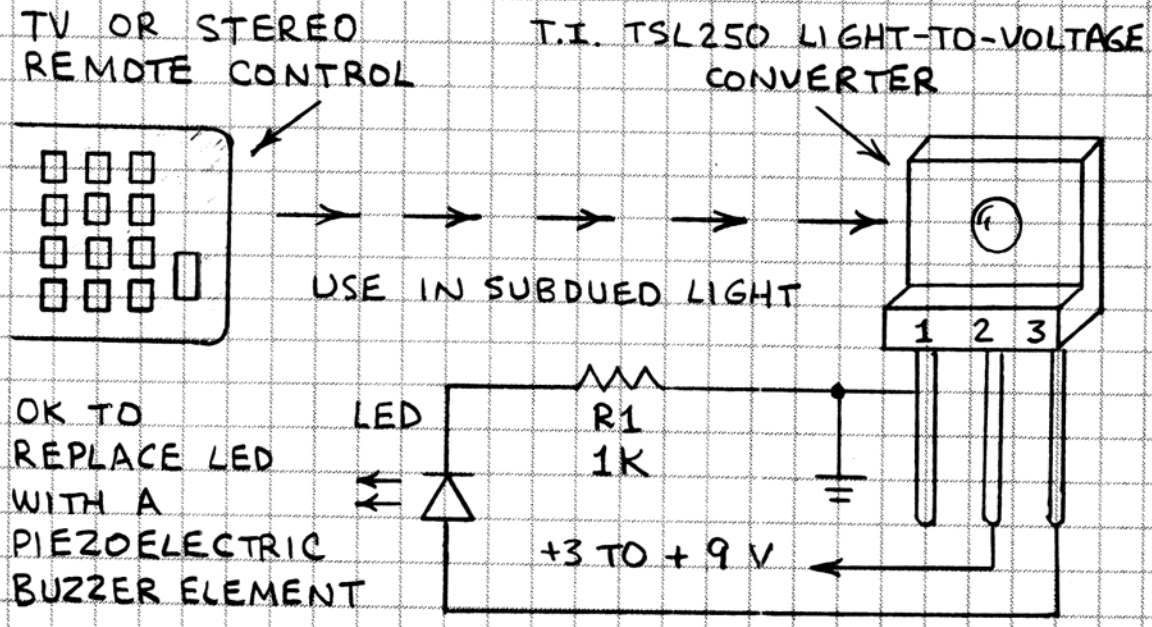

LIGHT-ACTIVATED RELAY

USE THIS CIRCUIT TO SENSE PEOPLE, OBJECTS, CARS, ETC. WORKS BEST AT NIGHT OR IN SUBDUED LIGHT. TO HELP BLOCK VISIBLE LIGHT PLACE PROCESSED COLOR PRINT FILM OVER TSL250.

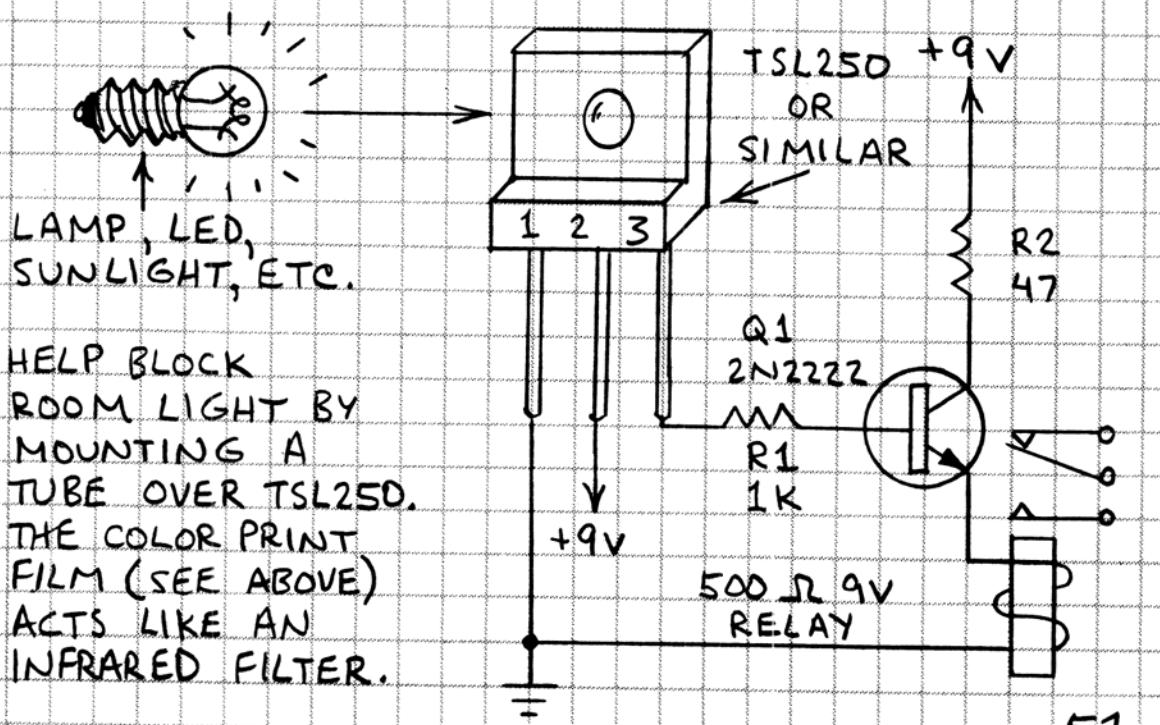

HELP BLOCK ROOM LIGHT BY MOUNTING A TUBE OVER TSL250. THE COLOR PRINT FILM (SEE ABOVE) ACTS LIKE AN INFRARED FILTER.

OPTICAL LEVEL SENSORS

THESE OPTICAL LEVEL SENSORS HAVE AUDIBLE OUTPUTS. FOR BEST RESULTS ILLUMINATE SIDE OF LEVEL VIAL WITH LED AND PLACE LIGHT SENSOR BELOW VIAL. INSTALL IN LIGHT-TIGHT BOX.

VARIABLE TONE LEVEL SENSOR

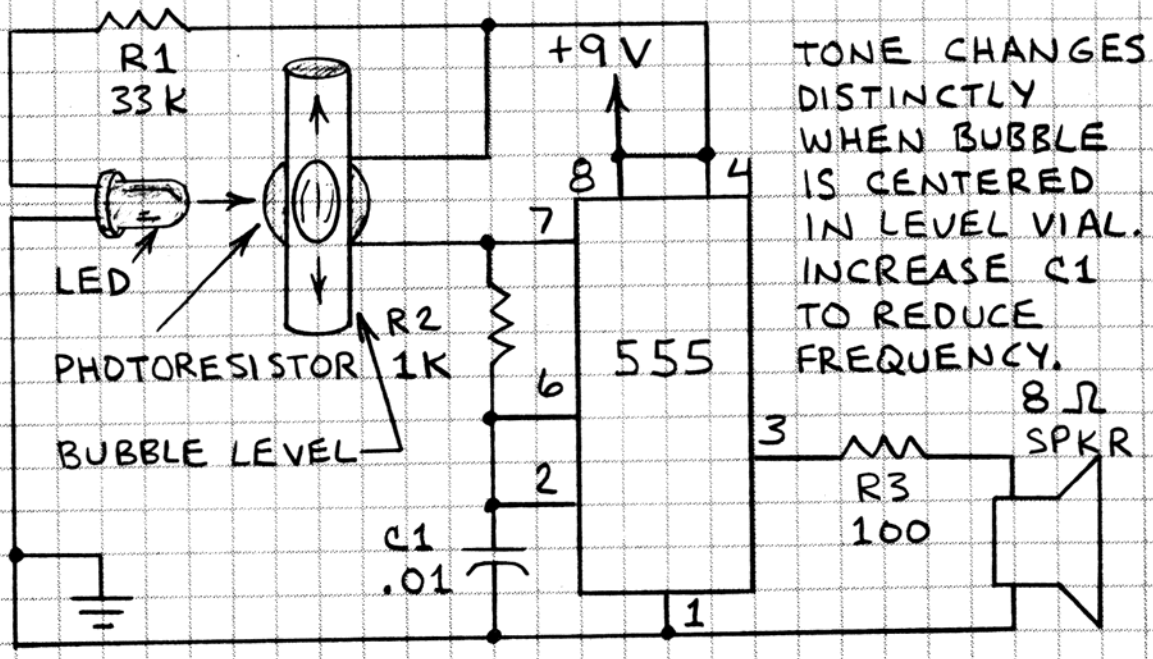

TONE CHANGES DISTINCTLY WHEN BUBBLE IS CENTERED IN LEVEL VIAL. INCREASE C1 TO REDUCE FREQUENCY.

SWITCHED TONE LEVEL SENSOR

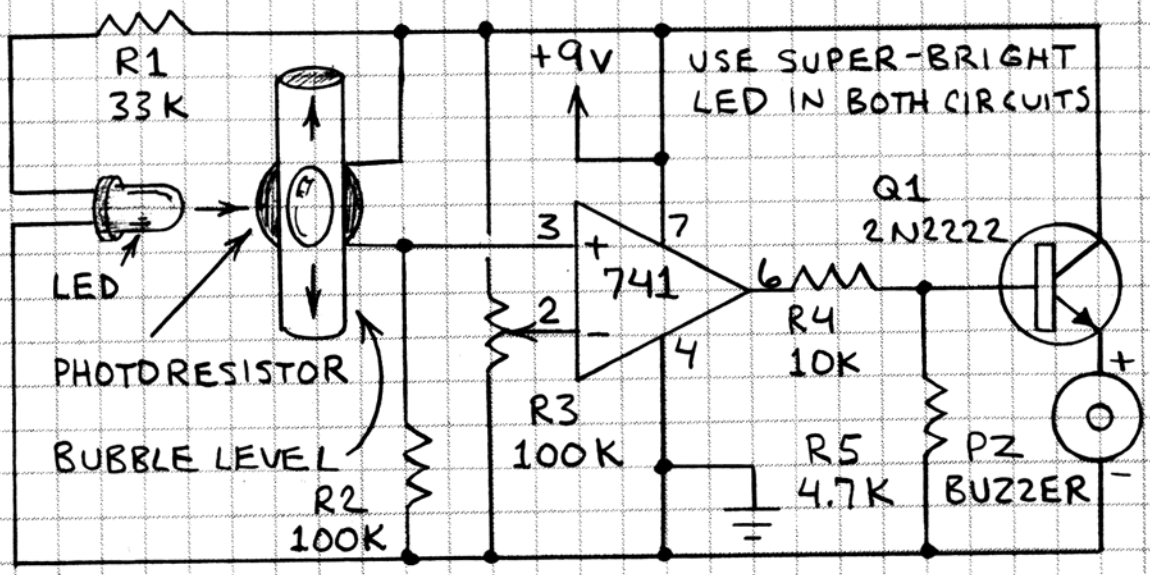

USE SUPER-BRIGHT LED IN BOTH CIRCUITS

ADJUST R3 UNTIL PIEZOELECTRIC (PZ) BUZZER SOUNDS WHEN BUBBLE IS CENTERED IN VIAL.

II. MAGNET SENSOR PROJECTS

OVERVIEW

THERE IS A ROCK THAT ATTRACTS IRON. THIS MINERAL IS THE IRON OXIDE (Fe_3O_4), ALSO KNOWN AS MAGNETITE. PIECES OF THIS MINERAL ARE NATURAL MAGNETS. HERE IS A SKETCH OF A PIECE OF MAGNETITE ON MY DESK AS I WRITE:

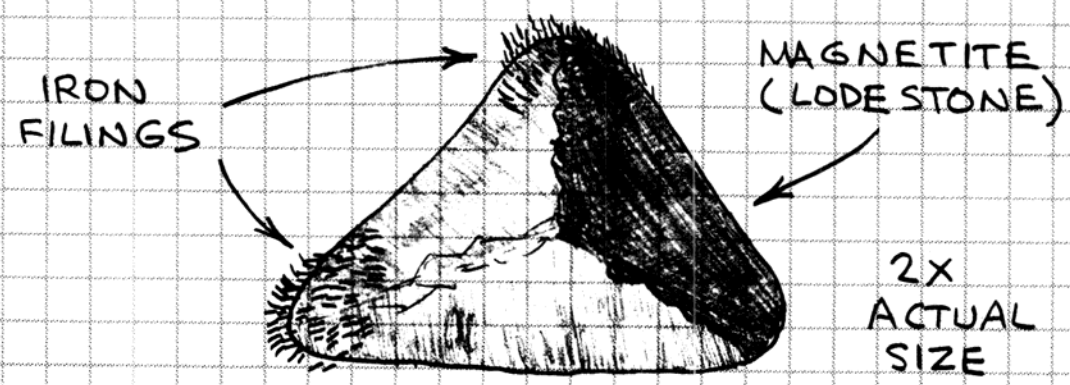

NATURAL MAGNETS ARE CALLED LODESTONES. THIS NAME COMES FROM "LEADING STONE," WHICH REFERS TO THE FACT THE SAME SIDE OF A LODESTONE SUSPENDED FROM A STRING ALWAYS POINTS NORTH. THIS DISCOVERY LED TO THE INVENTION OF THE COMPASS, THE FIRST WIDESPREAD APPLICATION FOR NATURAL MAGNETS. THE COMPASS GAVE SAILORS AND EXPLORERS A VITALLY IMPORTANT NAVIGATIONAL TOOL.

THERE ARE AT LEAST TWO STORIES ABOUT THE ORIGIN OF THE WORD "MAGNET." ACCORDING TO THE ROMAN WRITER LUCRETIUS[1], THE WORD COMES FROM MAGNESIA, THE GREEK PROVINCE WHERE LODESTONES WERE FOUND. PLINY THE ELDER[2] WROTE THAT THE NAME CAME FROM MAGNES, A GREEK SHEPHERD. THE NAILS IN HIS SHOES AND THE IRON TIP OF HIS STAFF WERE ATTRACTED TO A FIELD OF MAGNETITE AS HE WALKED.

[1] 96 TO 55 B.C. [2] A.D. 23 TO 79

MAGNETIC FIELDS

THE REGION AROUND A MAGNET THAT INFLUENCES EXTERNAL OBJECTS IS THE MAGNETIC FIELD OF THE MAGNET. THE MAGNETIC FIELD AROUND A MAGNET FORMS AN ORGANIZED PATTERN. THIS PATTERN CAN BE MADE VISIBLE BY SPRINKLING IRON FILINGS ON A SHEET OF WHITE PAPER LYING ON A BAR MAGNET.

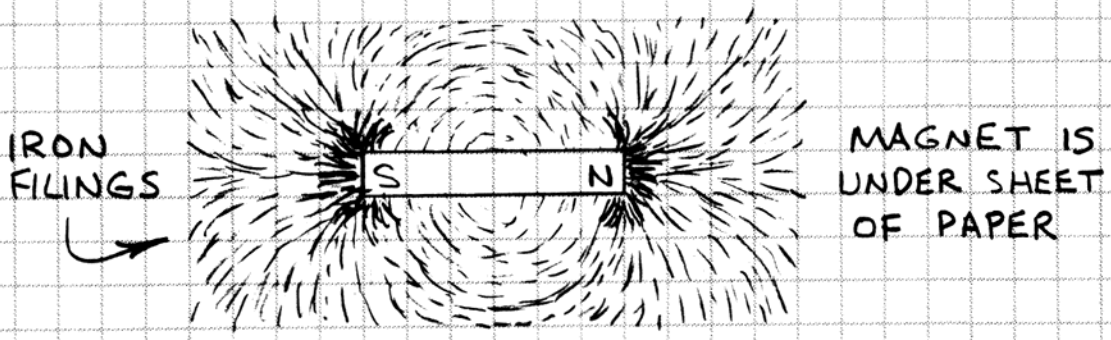

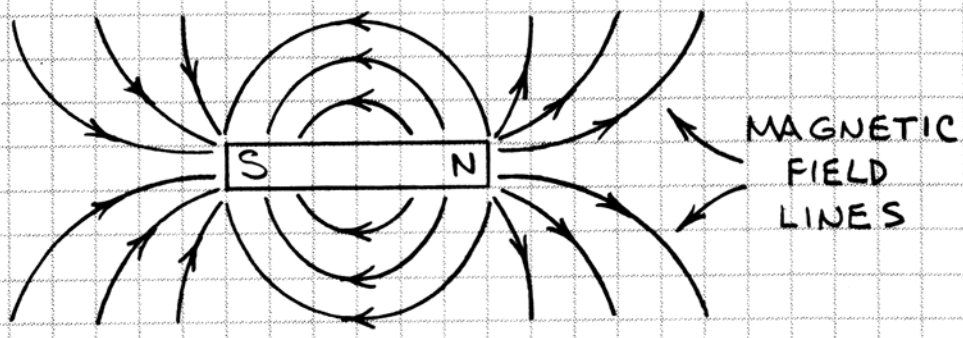

MAGNETIC FIELD LINES ARE MAPPED WITH A COMPASS.

MAGNETIC POLES

A MAGNET'S FORCE IS CONCENTRATED AT POINTS CALLED POLES. IF A BAR MAGNET IS HUNG FROM A STRING, ONE END WILL EVENTUALLY POINT NORTH. THIS END IS THE MAGNET'S NORTH POLE. THE END OF THE MAGNET THAT POINTS SOUTH IS THE SOUTH POLE.

THE OPPOSITE POLES OF TWO MAGNETS ATTRACT ONE ANOTHER. LIKE POLES REPEL.

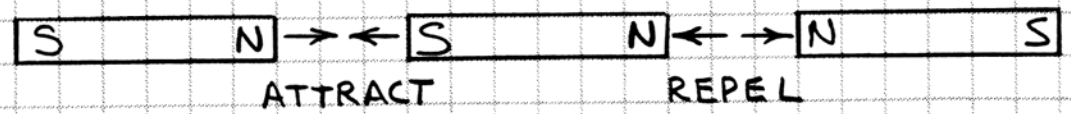

MAGNETIC FIELD INTENSITY

THE INTENSITY OF A MAGNETIC FIELD IS MEASURED IN GAUSS. THE MAGNETIC FIELD 1 CENTIMETER FROM A STRAIGHT LENGTH OF WIRE THROUGH WHICH A CURRENT OF 5 AMPERES IS FLOWING IS 1 GAUSS. THE MAGNETIC FIELD OF VARIOUS MAGNETS CAN BE HUNDREDS OR EVEN THOUSANDS OF GAUSS.

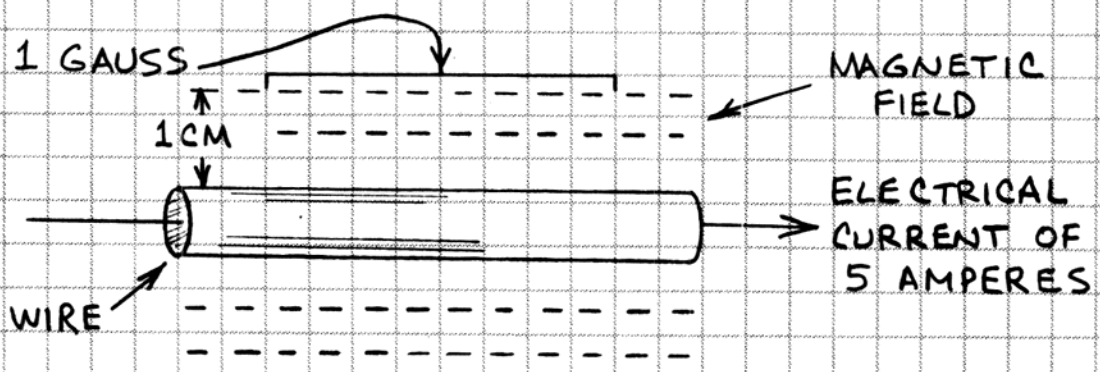

THE TERM GAUSS HONORS CARL FRIEDRICH GAUSS (1777 TO 1855), THE GREAT MATHEMATICIAN.

IS THE EARTH A MAGNET?

EARTH HAS A MAGNETIC FIELD, BUT EARTH IS NOT A MAGNET. THE EARTH'S CORE IS BELIEVED TO BE MOLTEN METAL THAT IS MUCH TOO HOT TO BE MAGNETIC. THE MOST POPULAR THEORY IS THAT EARTH'S MAGNETIC FIELD IS CAUSED BY ELECTRICAL CURRENTS GENERATED BY ROTATION OF THE LIQUID CORE.

EARTH'S MAGNETIC FIELD

THE FORCE OF EARTH'S MAGNETIC FIELD IS ABOUT 0.3 GAUSS NEAR THE EQUATOR AND ABOUT 0.7 GAUSS NEAR THE POLES. THOUGH VERY WEAK, THE FIELD IS EASILY DETECTED BY A COMPASS.

EARTH'S GEOGRAPHIC POLES

EARTH ROTATES ABOUT AN IMAGINARY AXIS. THE POINTS WHERE THE AXIS MEETS EARTH'S SURFACE ARE THE NORTH AND SOUTH POLES.

EARTH'S MAGNETIC POLES

EARTH ALSO HAS MAGNETIC POLES. THE MAGNETIC POLES DO NOT MATCH THE GEOGRAPHIC POLES. THE NORTHERNMOST MAGNETIC POLE IS NORTH OF CANADA'S HUDSON BAY. THE SOUTHERNMOST MAGNETIC POLE IS IN ANTARCTICA SOUTH OF TASMANIA.

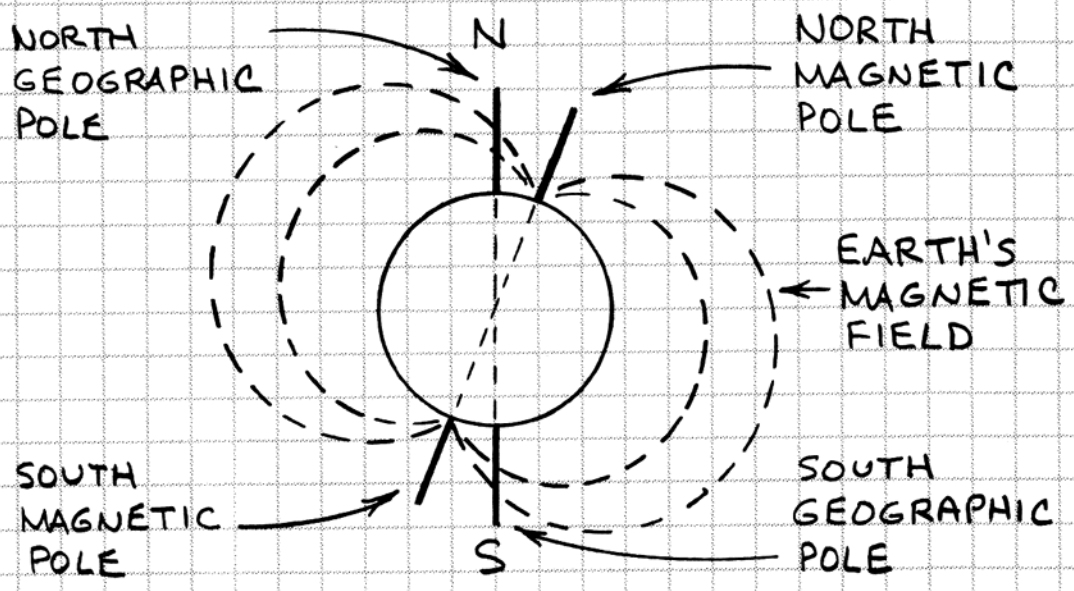

EARTH'S CHANGING FIELD

THE FORCE OF EARTH'S MAGNETIC FIELD FLUCTUATES ON A DAILY BASIS. THE CHANGE NEAR THE EQUATOR IS ABOUT 0.0002 GAUSS EACH DAY. AT THE POLES THE CHANGE IS 0.0005 GAUSS EACH DAY. THE CHANGE IS SOMETIMES GREATER THAN THIS WHEN THE SUN IS VERY ACTIVE.

LIVING MAGNETS

THE BODIES OF MANY ANIMALS INCLUDE BITS OF MAGNETITE. RECENT DISCOVERIES HAVE SHOWN THAT MAGNETITE MAY ACT AS A KIND OF COMPASS THAT ASSISTS THE NAVIGATION OF VARIOUS BIRDS, INSECTS, FISH AND EVEN BACTERIA.

MAGNETIC BACTERIA

IN 1975 RICHARD BLACKMORE NOTICED THAT SOME BACTERIA FROM THE MUDDY BOTTOMS OF MARSHES ALWAYS MIGRATE TO ONE SIDE OF A DROP OF WATER. WHEN HE PLACED A MAGNET NEARBY, THE BACTERIA SWAM TOWARD THE SOUTH-SEEKING POLE AND AWAY FROM THE NORTH-SEEKING POLE. LATER IT WAS DISCOVERED THAT MAGNETIC BACTERIA ALIGN THEMSELVES WITH A MAGNETIC FIELD EVEN WHEN THEY ARE DEAD. MORE THAN A DOZEN KINDS OF MAGNETIC BACTERIA HAVE BEEN DISCOVERED. MOST LIVE IN MUD OR SILT UNDER BODIES OF WATER, AND SOME LIVE IN SOIL. THEY ARE COLLECTIVELY KNOWN AS <u>MAGNETOTAXIC BACTERIA</u>. THEY INCLUDE A STRING OF MICROSCOPIC MAGNETS CALLED <u>MAGNETOSOMES</u>.

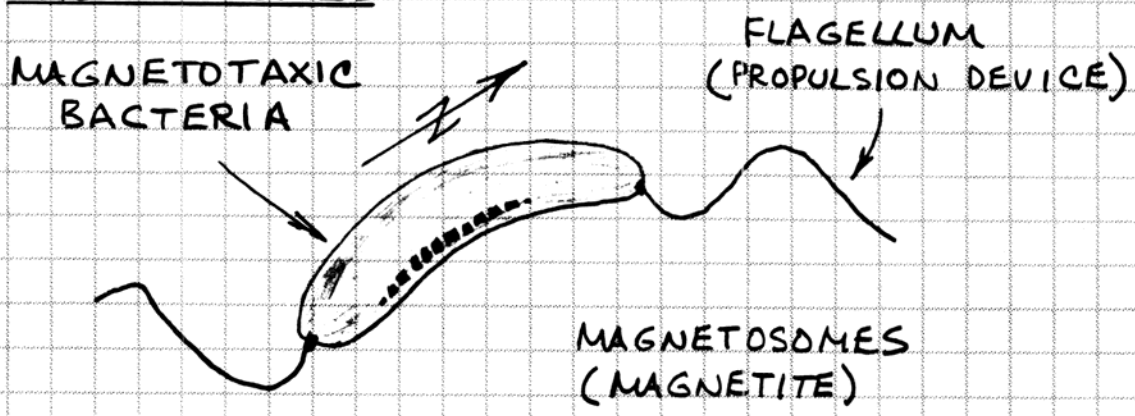

MAGNETOTAXIC BACTERIA IN THE NORTHERN HEMISPHERE SWIM NORTH. THOSE IN THE SOUTHERN HEMISPHERE SWIM SOUTH. THOSE NEAR THE EQUATOR SWIM IN EITHER DIRECTION.

APPLICATIONS FOR MAGNETS

1. DIRECT CURRENT (DC) MOTORS
2. ELECTRICAL GENERATORS
3. AUDIO SPEAKERS
4. AUDIO EAR AND HEAD PHONES
5. SEPARATING IRON AND STEEL SCRAP FROM NON-MAGNETIC MATERIALS
6. RETRIEVE IRON AND STEEL OBJECTS LOST IN BODIES OF WATER
7. RETRIEVE BROKEN DRILL HEADS FROM OIL AND GAS WELLS
8. COLLECT FILING CHIPS FROM DRILLED HOLES
9. TRAP BITS OF METAL IN STOMACHS OF COWS ("COW MAGNETS")
10. ERASE DATA STORED ON MAGNETIC TAPE
11. CABINET LATCHES
12. TEMPORARILY MOUNT ANTENNA ON CAR ROOF
13. TEMPORARILY MOUNT SIGNS ON CARS
14. MOUNTING, SUPPORTING AND HOLDING SIGNS, GADGETS AND OBJECTS IN HOMES AND OFFICES
15. COLLECTING NAILS LOST IN SOIL
16. PAPER CLIP HOLDER
17. SCIENTIFIC RESEARCH AND DEVELOPMENT
18. I'VE USED A MAGNET TO FIND BITS OF IRON METEORITE INSIDE A LARGE METEOR CRATER

MAGNET CONFIGURATIONS

AMONG THE MANY MAGNET CONFIGURATIONS ARE THESE:

BAR

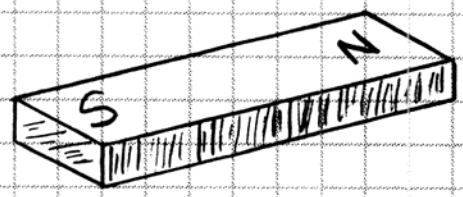

DISK

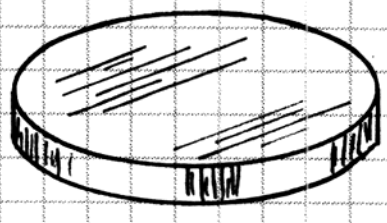

HORSESHOE

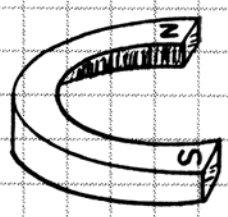

CYLINDER

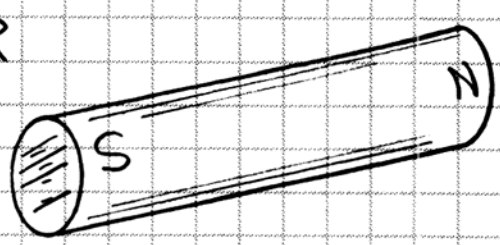

RING

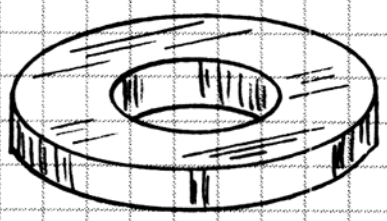

FLEXIBLE

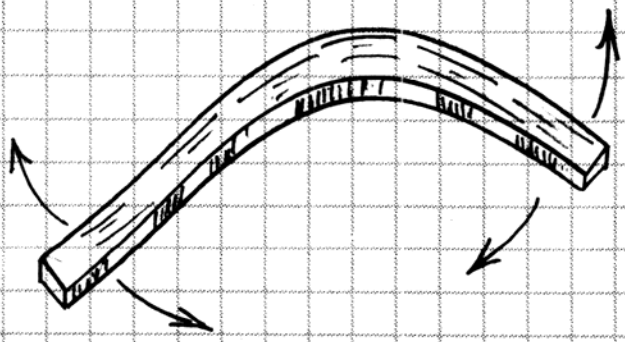

TEMPORARY MAGNETS

SOFT IRON AND STEEL CAN BE MAGNETIZED, BUT DO NOT NECESSARILY STAY MAGNETIZED.

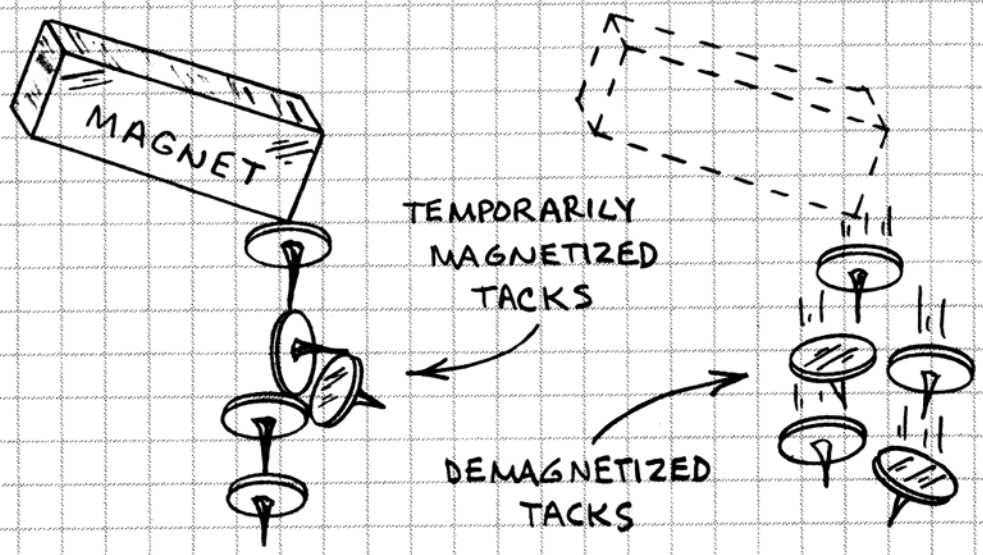

PERMANENT MAGNETS

HARDENED IRON AND STEEL AND CERTAIN METAL ALLOYS STAY MAGNETIZED INDEFINITELY. CERAMIC MAGNETS AND MAGNETIC RUBBER AND PLASTIC CONTAIN PARTICLES OF MAGNETIC MATERIAL. HERE ARE SOME COMMON PERMANENT MAGNET MATERIALS AND THE STRENGTH OF THEIR MAGNETIC FIELD:

ALNICO (VARIOUS ALLOYS OF ALUMINUM, NICKEL AND COBALT) — 5,500 TO 13,100 GAUSS

CHROMIUM STEEL — 9,700 GAUSS

RARE EARTH COBALT — 8,100 GAUSS

CERAMIC — 2,200 TO 3,500 GAUSS

PLASTIC — 1,400 GAUSS

RUBBER — 1,300 TO 2,300 GAUSS

DATA: "HANDBOOK OF CHEMISTRY AND PHYSICS" (CRC PRESS).

USING AND CARING FOR MAGNETS

1. THE ABILITY OF A MAGNET TO LIFT A LOAD IS REDUCED BY SOIL, DUST, PAINT AND RUST ON THE MAGNET OR LOAD.

2. LIFTING ABILITY IS REDUCED WHEN THE LOAD IS VERY THIN (CANS, ETC.) OR HAS A ROUGH OR IRREGULAR SURFACE.

3. AVOID DROPPING OR STRIKING A MAGNET. IT MIGHT BREAK OR BECOME DEMAGNETIZED.

4. FORCING THE SAME POLES OF TWO MAGNETS TOGETHER CAN PARTIALLY DEMAGNETIZE BOTH MAGNETS.

5. ALWAYS SEPARATE TWO MAGNETS BY PULLING THEM AWAY FROM ONE ANOTHER. DO NOT SLIDE ONE MAGNET AGAINST ANOTHER TO SEPARATE THEM AS THIS MIGHT SHARPLY DEMAGNETIZE ONE OR BOTH MAGNETS. TRY TO KEEP SEPARATED MAGNETS FROM SLAMMING BACK TOGETHER.

6. AVOID PLACING A MAGNET NEAR A STRONG MAGNETIC FIELD FROM A MOTOR.

7. A "KEEPER" OF SOFT IRON WILL EXTEND THE LIFE OF A MAGNET.

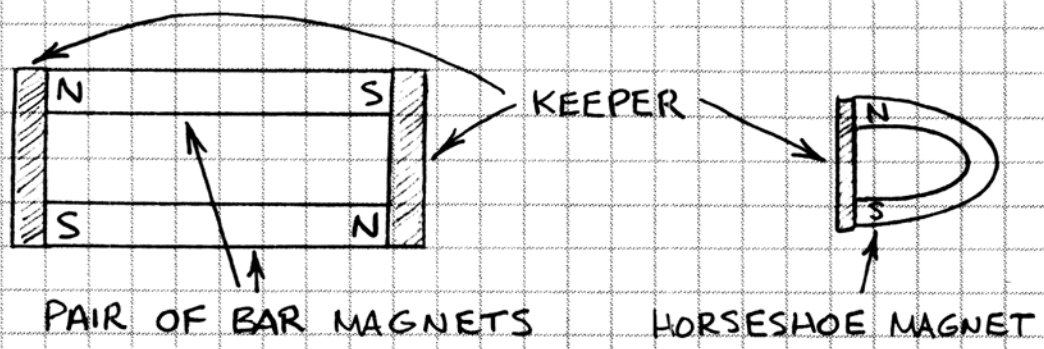

8. CAUTION! KEEP MAGNETS AWAY FROM MAGNETIC MEDIA (COMPUTER DISKS, CREDIT CARDS, RECORDING TAPE, ETC.)! ALSO KEEP MAGNETS AWAY FROM MECHANICAL WATCHES.

THE COMPASS

THE SIMPLEST COMPASS IS A MAGNETIZED IRON NEEDLE OR POINTER FREE TO ROTATE ABOUT A PIVOT. THE NEEDLE WILL ALIGN ITSELF ALONG THE EARTH'S MAGNETIC FIELD. SOME HISTORIANS BELIEVE THE FIRST COMPASS WAS A LODESTONE ATOP A SMALL PIECE OF WOOD FLOATING IN A BOWL OF WATER. I TRIED THIS BY PLACING A LODESTONE ON A SMALL SQUARE OF WOOD FLOATING ON WATER IN A PLASTIC BOX. BUT THIS "COMPASS" WORKS ONLY WHEN THE WATER IS STILL. IT MIGHT WORK ON LAND, BUT IT WOULD NOT WORK WELL IN A BOAT. THE FIRST PRACTICAL COMPASSES ARE BELIEVED TO HAVE BEEN MAGNETIZED NEEDLES INSERTED CROSSWAYS THROUGH A FLOATING REED OR SPLINTER. THE NEEDLE WAS MAGNETIZED BY STROKING IT AGAINST A LODESTONE.

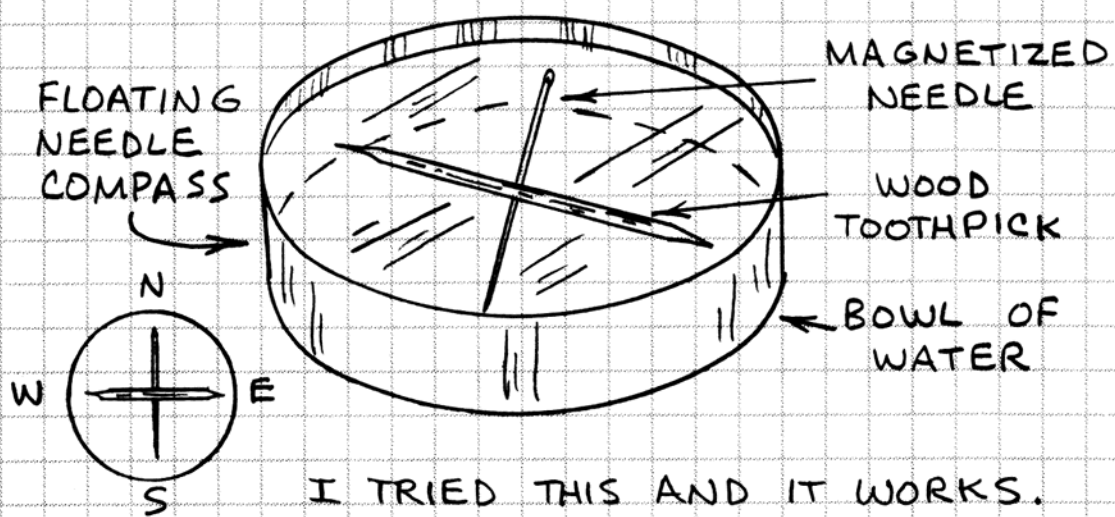

I TRIED THIS AND IT WORKS. FIRST I STROKED A STEEL SEWING NEEDLE AGAINST A LODESTONE. SINCE THE NEEDLE ATTRACTED IRON FILINGS, IT WAS MAGNETIZED. I USED PLIERS TO FORCE THE NEEDLE THROUGH A WOOD TOOTHPICK. <u>CAUTION</u>: USE CARE TO AVOID BREAKING THE NEEDLE OR PRESSING IT INTO A FINGER! WHEN FLOATED ON WATER, THE NEEDLE AND TOOTHPICK ARRANGEMENT WILL SLOWLY ROTATE UNTIL THE NEEDLE POINTS NORTH AND SOUTH AND THE TOOTHPICK EAST AND WEST.

MAPPING A MAGNETIC FIELD

A COMPASS CAN BE USED TO MAP A MAGNET'S FIELD. THIS IS OFTEN MORE PRACTICAL THAN USING IRON FILINGS.

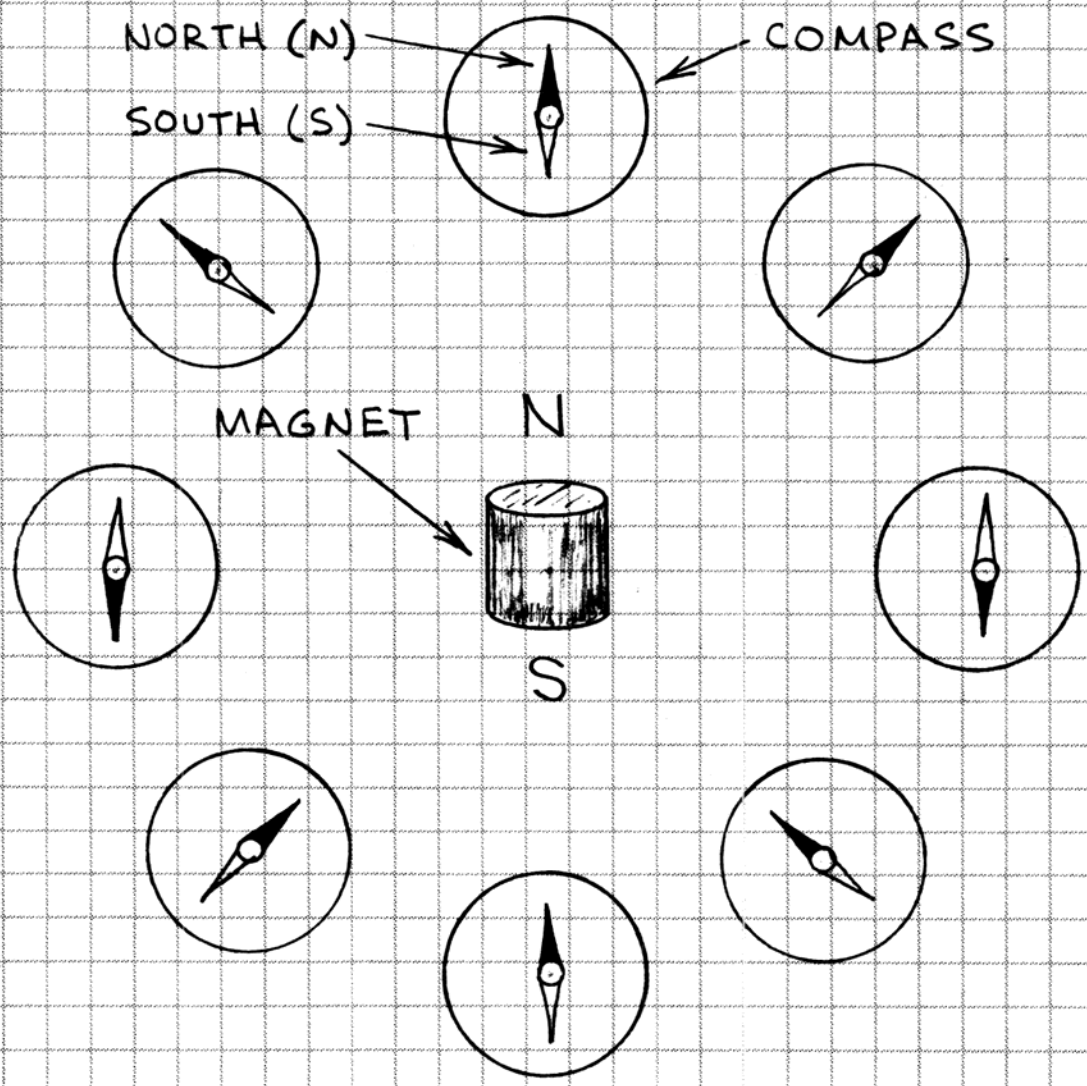

NOTICE HOW THE <u>NORTH</u> END OF THE COMPASS NEEDLE POINTS TO THE <u>SOUTH</u> POLE OF THE MAGNET.

TIP: OPPOSITES ATTRACT, UNLIKES REPEL.

A COMPASS WILL RESPOND TO A MAGNET UP TO 30 CENTIMETERS (ABOUT 1 FOOT) AWAY.

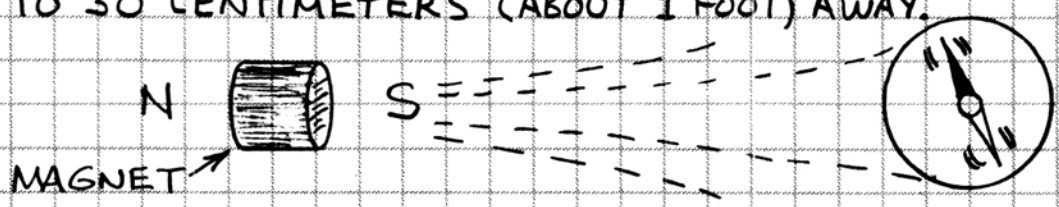

ELECTROMAGNET

AN ELECTRICAL CURRENT FLOWING THROUGH A LOOP OF WIRE CREATES A MAGNETIC FIELD. THE WEAK FIELD OF A SINGLE LOOP CAN BE GREATLY INCREASED BY WINDING A COIL OF MANY LOOPS.

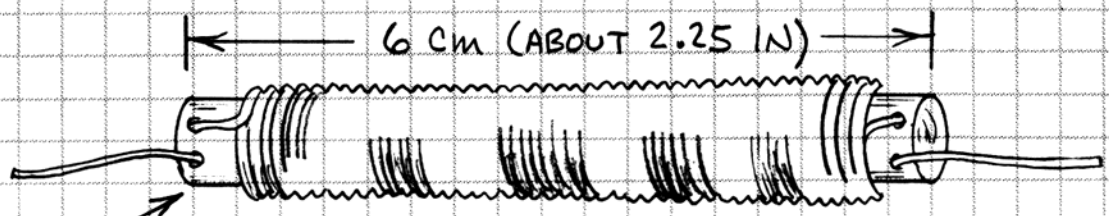

PLASTIC SODA STRAW

APPROXIMATELY 9 METERS (30 FEET)
30 AWG COATED MAGNET WIRE
(ABOUT 3 LAYERS WHEN TIGHTLY WOUND)

INSERT STEEL* INSIDE THIS COIL AND CONNECT A 6-VOLT LANTERN BATTERY TO WIRE LEADS. USE FLAME OR FINE GRIT SAND PAPER TO REMOVE INSULATION FROM ENDS OF WIRE. *NAIL, ETC.

SOLENOID

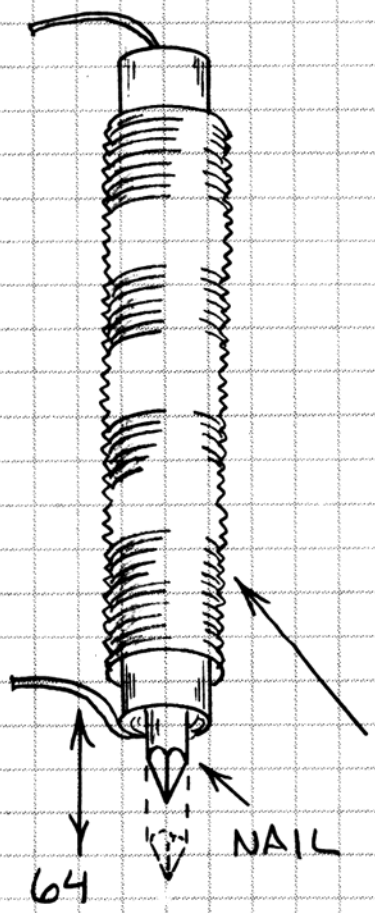

THE ELECTROMAGNET SHOWN ABOVE CAN ALSO FUNCTION AS A SOLENOID OR "SUCKING MAGNET." PLACE COIL IN A VERTICAL POSITION. ALLOW NAIL TO TOUCH SURFACE BELOW COIL. WHEN CURRENT IS APPLIED TO THE COIL, THE NAIL WILL BE RAPIDLY PULLED UP INTO THE COIL BY THE COIL'S MAGNETIC FIELD. SOLENOIDS RELEASE LATCHES, CLOSE VALVES, LOCK DOORS, ETC.

RESISTANCE OF PROTOTYPE COIL IS 3.1 Ω. AT 6 VOLTS THE CURRENT IS 6/3.1 OR 1.9 AMPS. USE SOLENOID SPARINGLY TO PRESERVE BATTERY LIFE.

ELECTROMAGNETIC RELAY

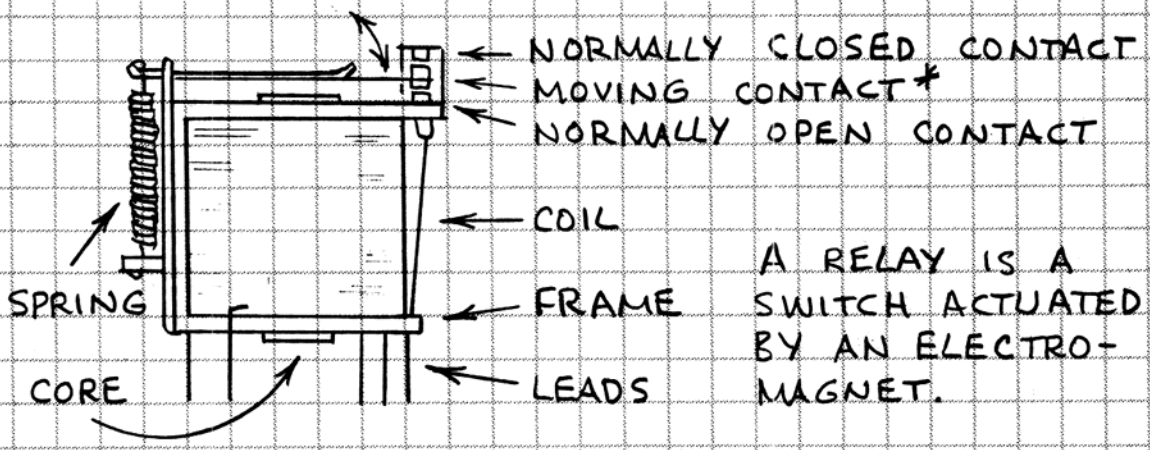

A RELAY IS A SWITCH ACTUATED BY AN ELECTROMAGNET.

* OPERATING POINT

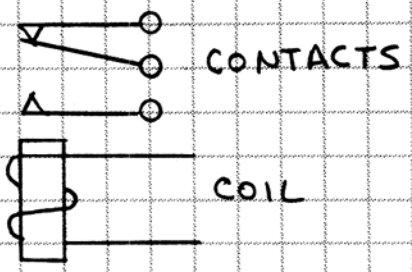

RELAY DIAGRAM

RELAYS CAN BE ACTUATED BY LOW-VOLTAGE TRANSISTOR AND IC CIRCUITS. THEIR CONTACTS CAN CONTROL VOLTAGES AND CURRENTS THAT WOULD DESTROY TRANSISTORS AND ICs.

RELAY DRIVER

THIS CIRCUIT SHOWS HOW A SINGLE TRANSISTOR CAN CONTROL A RELAY.

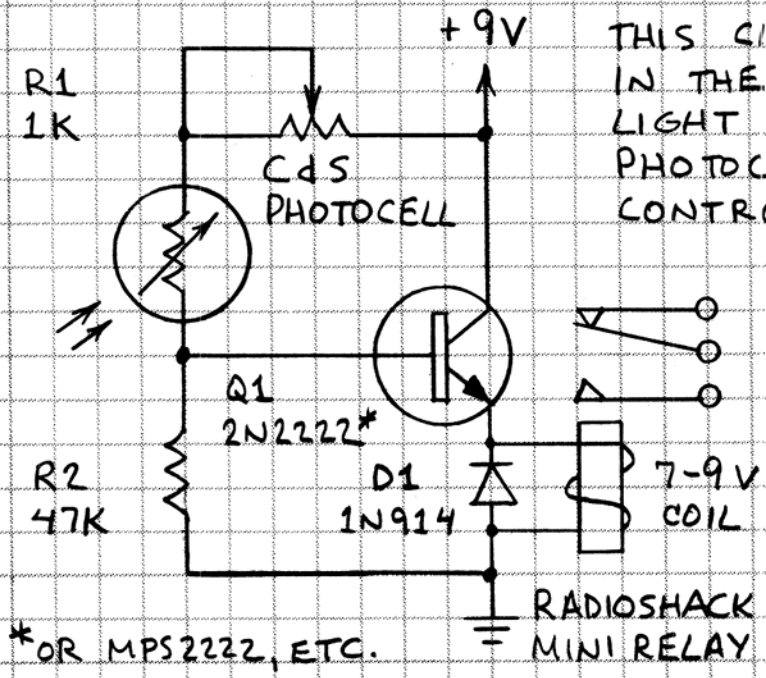

THIS CIRCUIT PULLS IN THE RELAY WHEN LIGHT STRIKES THE PHOTOCELL. R1 CONTROLS SENSITIVITY.

D1 PROTECTS Q1 FROM HIGH VOLTAGE SPIKE THAT OCCURS WHEN RELAY IS SWITCHED OFF.

*OR MPS2222, ETC.

MAGNET SWITCHES

A MAGNET SWITCH IS A REED SWITCH THAT HAS A FLEXIBLE MEMBER THAT BENDS TOWARD OR AWAY FROM A RIGID MEMBER WHEN A MAGNET IS NEAR.

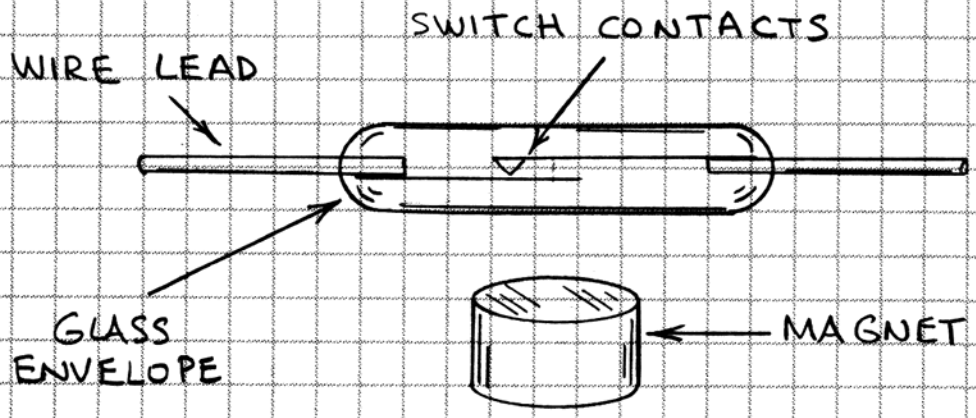

MAGNET SWITCHES ARE VERY RELIABLE AND REQUIRE NO POWER SUPPLY. THEY ARE OFTEN USED TO DETECT OPEN DOORS AND WINDOWS IN SECURITY ALARM SYSTEMS. FOR THESE USES THE SWITCH IS USUALLY INSTALLED IN A PLASTIC HOUSING WITH EXTERNAL WIRE LEADS OR SCREW TERMINALS. THE ACTUATING MAGNET IS INSTALLED IN A SIMILAR HOUSING.

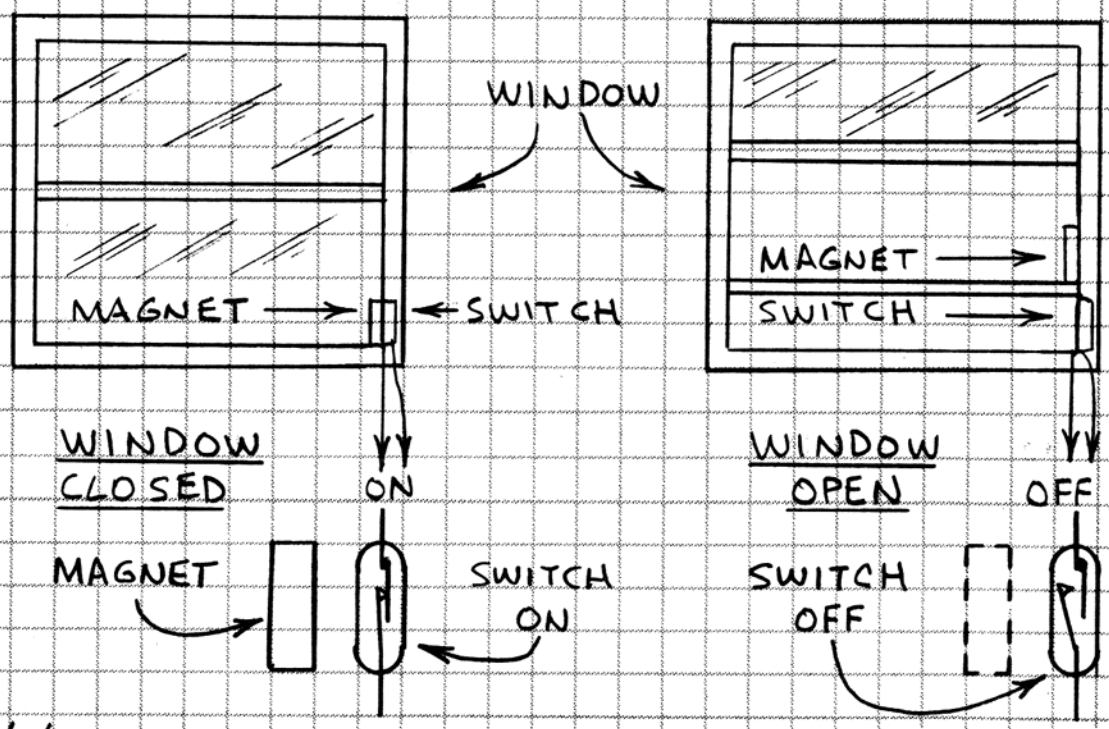

MAGNET SWITCH INTERFACE

THIS SIMPLE TRANSISTOR CIRCUIT WILL SWITCH ON LED 2 WHEN A MAGNET IS NEAR SW1. LED 1 IS SWITCHED ON WHEN THE MAGNET IS REMOVED.

TIP: LET
LED 1 = RED
LED 2 = GREEN.
THEN MAGNET PRESENT = GREEN AND MAGNET ABSENT = RED.

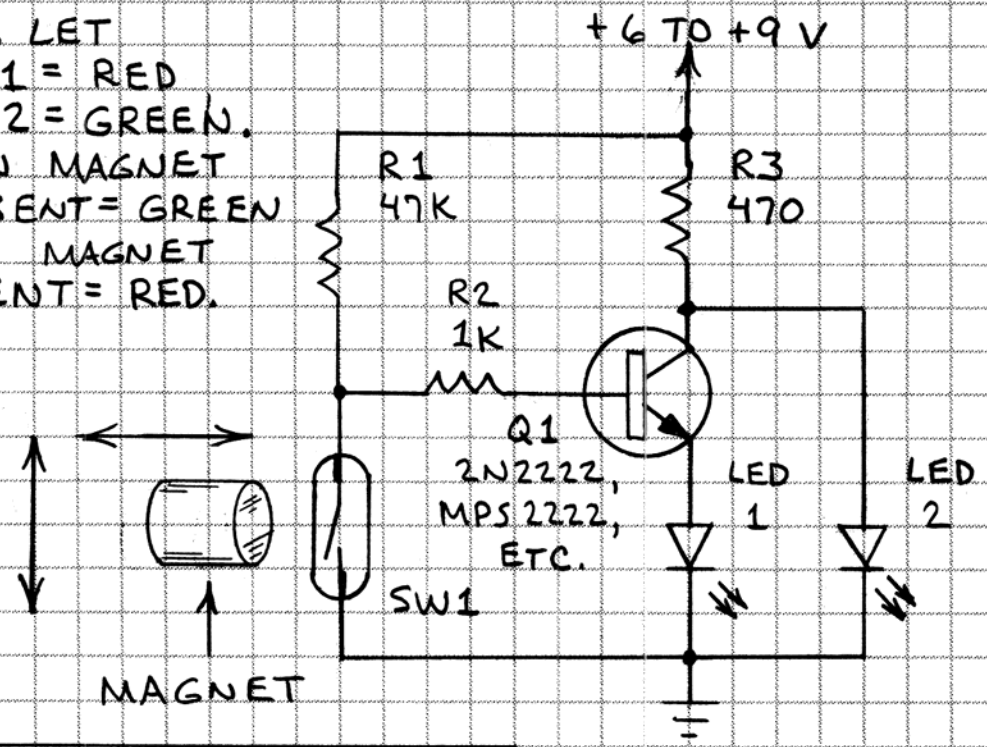

MAGNET	LED 1	LED 2
YES	OFF	ON
NO	ON	OFF

SWITCH WILL RESPOND TO EITHER NORTH OR SOUTH POLE OF MAGNET.

MAGNET ACTUATED TONE

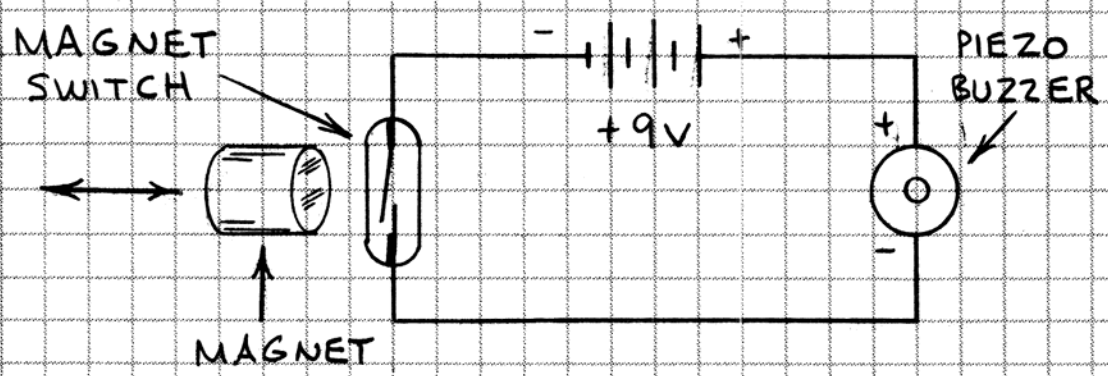

PLACE MAGNET NEAR SWITCH TO ACTIVATE TONE. OK TO USE LAMP INSTEAD OF BUZZER.

THE HALL EFFECT

IN OCTOBER 1879, THE PHYSICIST EDWARD HALL DISCOVERED THE EFFECT THAT BEARS HIS NAME. HALL FOUND THAT A STRONG MAGNETIC FIELD CAUSED A VOLTAGE TO APPEAR ACROSS A THIN FILM OF GOLD THROUGH WHICH AN ELECTRICAL CURRENT WAS FLOWING. THIS VOLTAGE IS CALLED THE HALL VOLTAGE. IT IS PROPORTIONAL TO THE MAGNETIC FIELD TIMES THE CURRENT.

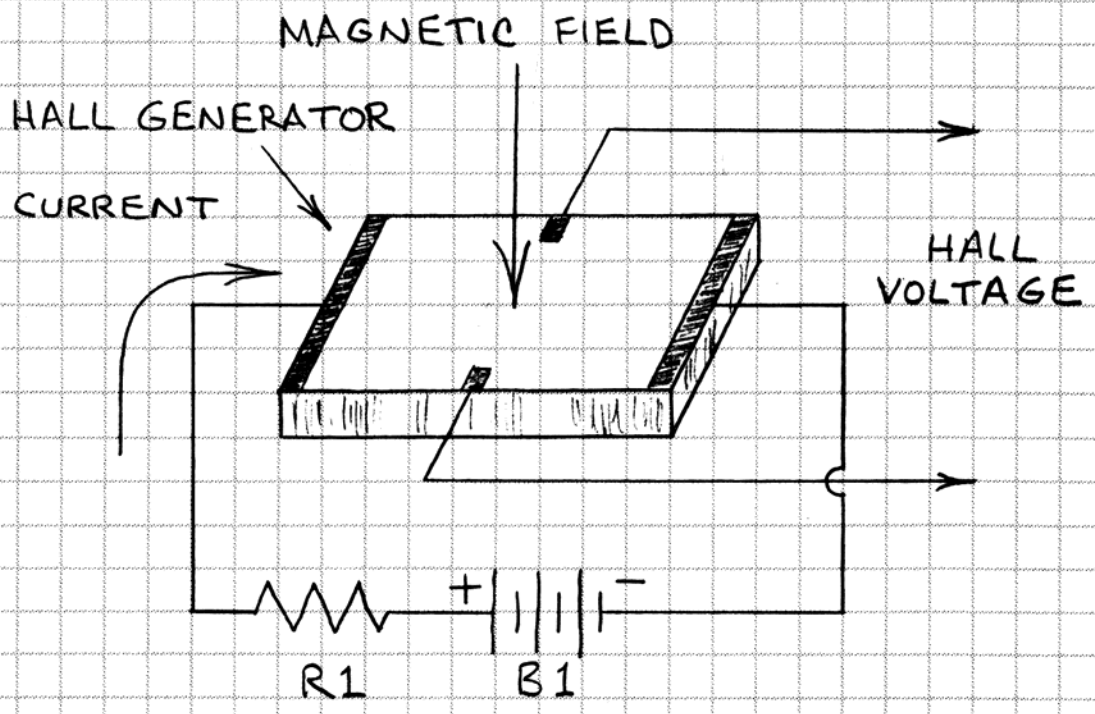

RESISTOR R1 LIMITS (RESTRICTS) THE CURRENT FROM BATTERY B1 TO A SAFE VALUE. TOO MUCH CURRENT WILL OVERHEAT AND DAMAGE THE HALL GENERATOR.

THE HALL EFFECT OCCURS IN CONDUCTORS AND SEMICONDUCTORS. THE HALL VOLTAGE PRODUCED BY CONDUCTORS IS MUCH TOO SMALL FOR PRACTICAL APPLICATIONS. THE HALL VOLTAGE IS MUCH HIGHER IN SEMICONDUCTORS. GALLIUM ARSENIDE AND OTHER SEMICONDUCTORS PRODUCE THE MOST VOLTAGE. BUT SILICON IS PREFERRED SINCE IT IS STURDIER AND EASIER TO MANUFACTURE.

APPLICATIONS FOR HALL SENSORS

HALL SENSORS HAVE MANY APPLICATIONS IN ELECTRONICS AND SENSING. THEY CAN BE USED INSTEAD OF LIGHT SENSORS IN APPLICATIONS WHERE THE SENSOR MIGHT BECOME DIRTY OR EXPOSED TO BRIGHT LIGHT. HERE ARE SOME OF THE MOST COMMON APPLICATIONS:

MAGNETIC FIELD SENSOR

HALL SENSORS CAN DETECT PRESENCE OR ABSENCE OF SMALL MAGNETS.

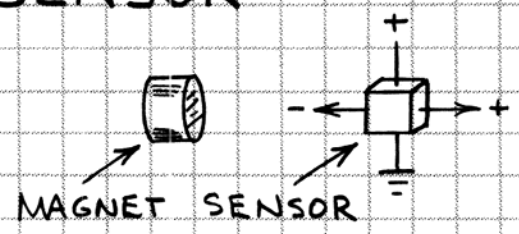

ELECTROMAGNETIC FIELD SENSOR

HALL SENSORS CAN DETECT MAGNETIC FIELD CAUSED BY ELECTRICAL CURRENT.

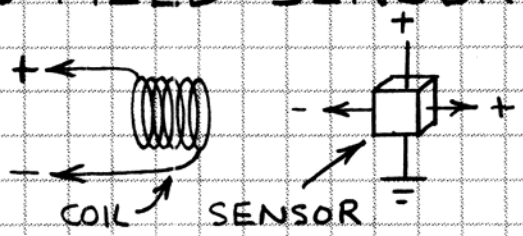

BOUNCELESS SWITCH

SWITCH MADE WITH HALL SENSOR DOES NOT HAVE MECHANICAL "BOUNCE" OF CONVENTIONAL SWITCH.

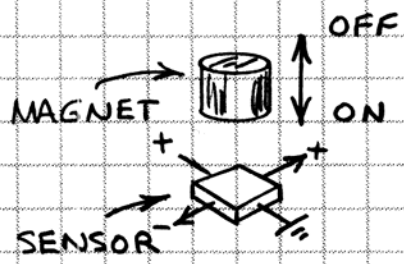

FERROUS METAL DETECTOR

HALL SENSOR BACKED BY SMALL MAGNET WILL DETECT FERROUS METAL.

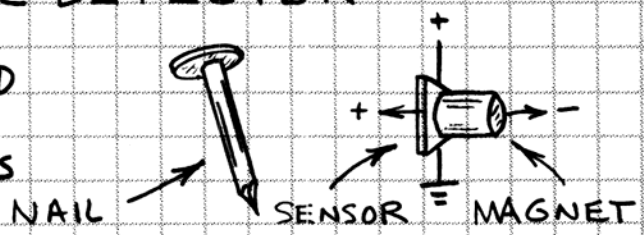

GEAR TOOTH SENSOR

HALL SENSOR BACKED BY SMALL MAGNET WILL DETECT TEETH ON A GEAR.

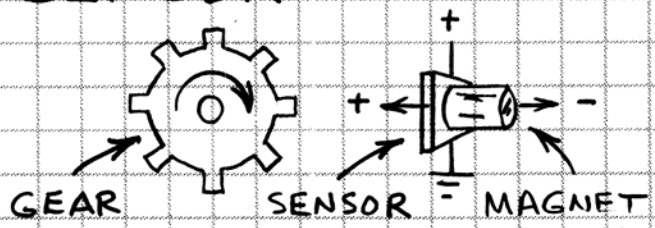

HALL SENSOR BASICS

MOST HALL SENSORS ARE MANUFACTURED WITH A BUILT-IN AMPLIFIER OR LOGIC CIRCUIT TO MAKE THEM EASIER TO USE. IT'S HELPFUL TO UNDERSTAND HOW THE SENSOR IS CONNECTED TO THESE INTERFACE CIRCUITS.

BASIC HALL SENSOR

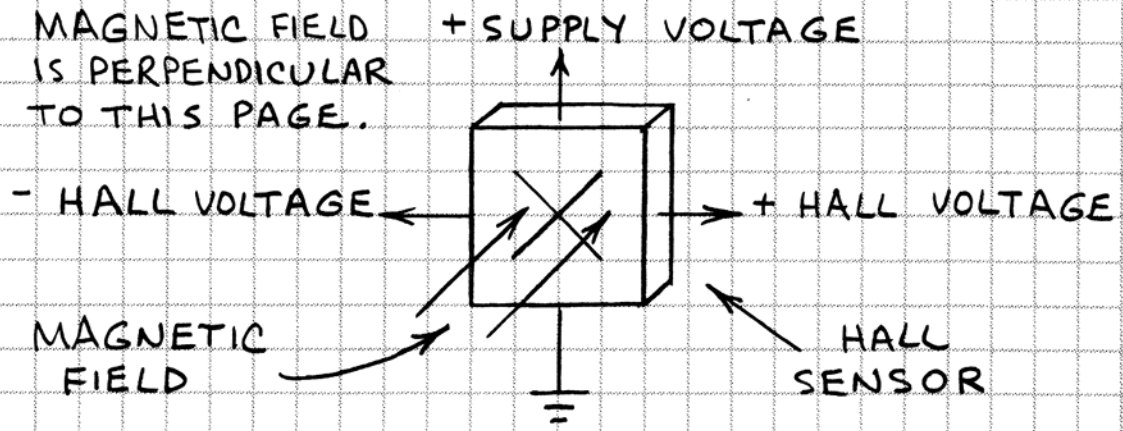

BASIC HALL SENSOR CIRCUIT

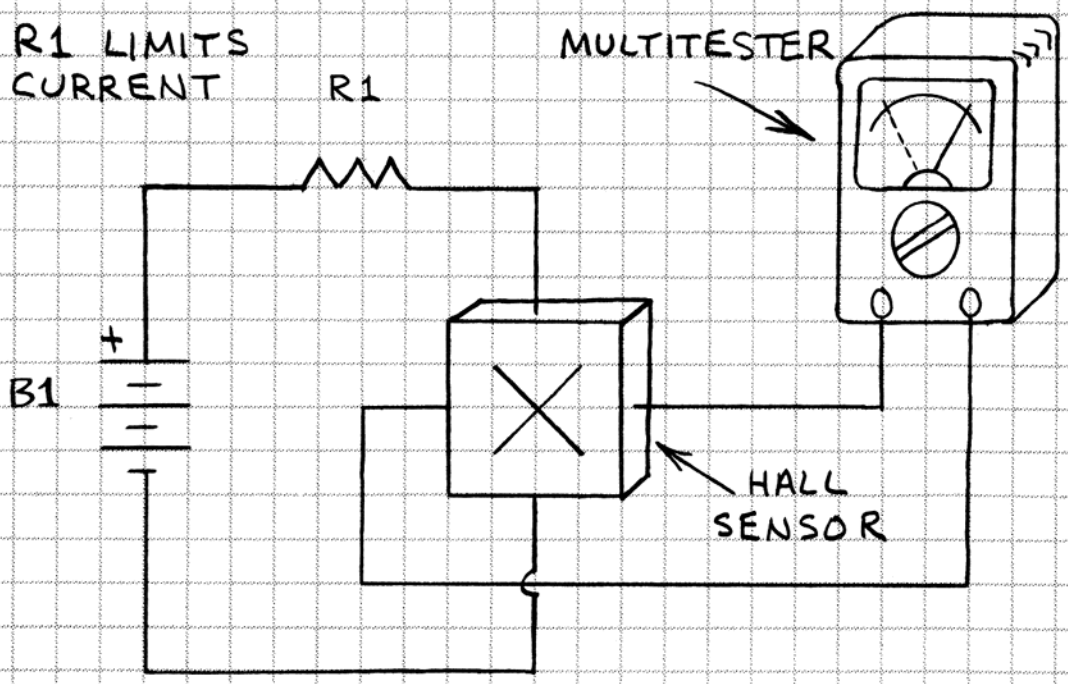

THIS CIRCUIT GENERATES AN OUTPUT VOLTAGE WHEN A MAGNET IS PLACED NEAR THE HALL EFFECT SENSOR.

HALL SENSOR OUTPUT VOLTAGE

THE HALL VOLTAGE IS PROPORTIONAL TO THE APPLIED MAGNETIC FIELD ACCORDING TO:

$$V_H = R_H \times \left(\frac{I}{t} \times B \right)$$

WHERE,

V_H IS THE HALL VOLTAGE,

R_H IS THE HALL EFFECT COEFFICIENT,

I IS THE CURRENT THROUGH THE SENSOR,

t IS THE THICKNESS OF THE SENSOR, AND

B IS THE <u>PERPENDICULAR</u> MAGNETIC FIELD.

IN PRACTICAL TERMS, THE HALL VOLTAGE IN A TYPICAL SILICON HALL SENSOR IS ABOUT 18 MICROVOLTS (0.000018 VOLT) PER GAUSS WHEN THE SUPPLY IS 3 VOLTS. THIS IS SUCH A SMALL VOLTAGE THAT HALL SENSORS ARE USUALLY MANUFACTURED WITH A BUILT-IN AMPLIFIER OR LOGIC CIRCUIT.

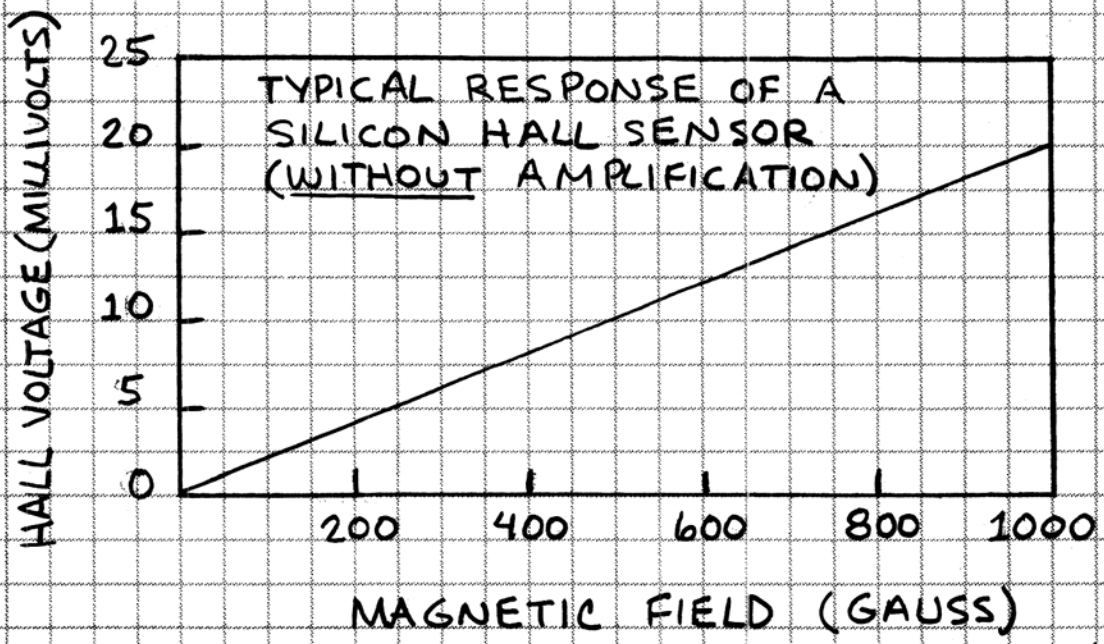

HALL SENSOR + LOGIC CIRCUIT

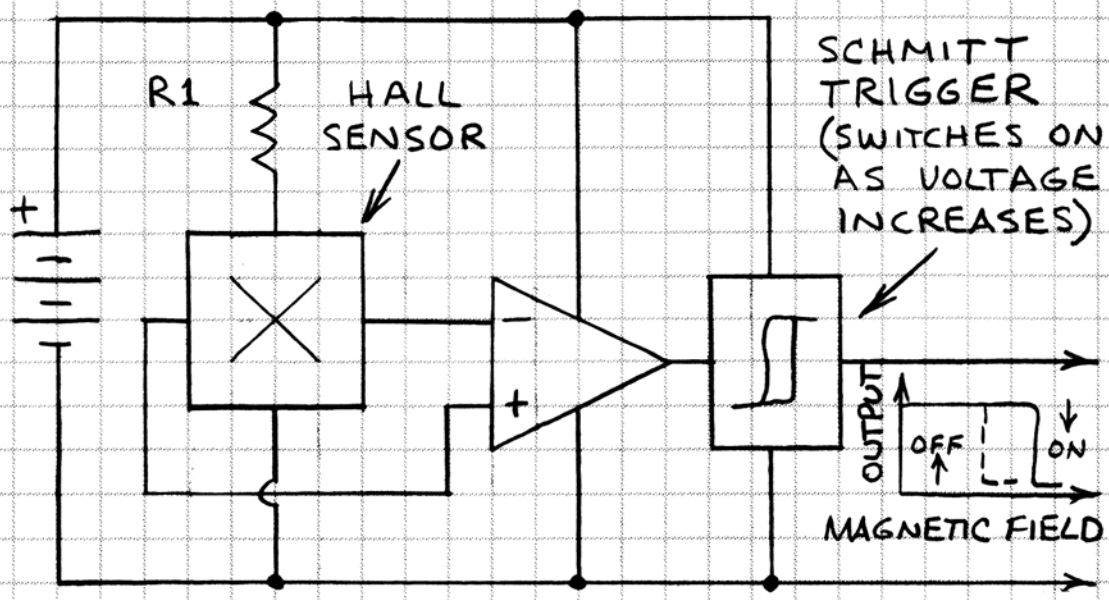

INTEGRATED DIGITAL HALL SENSOR

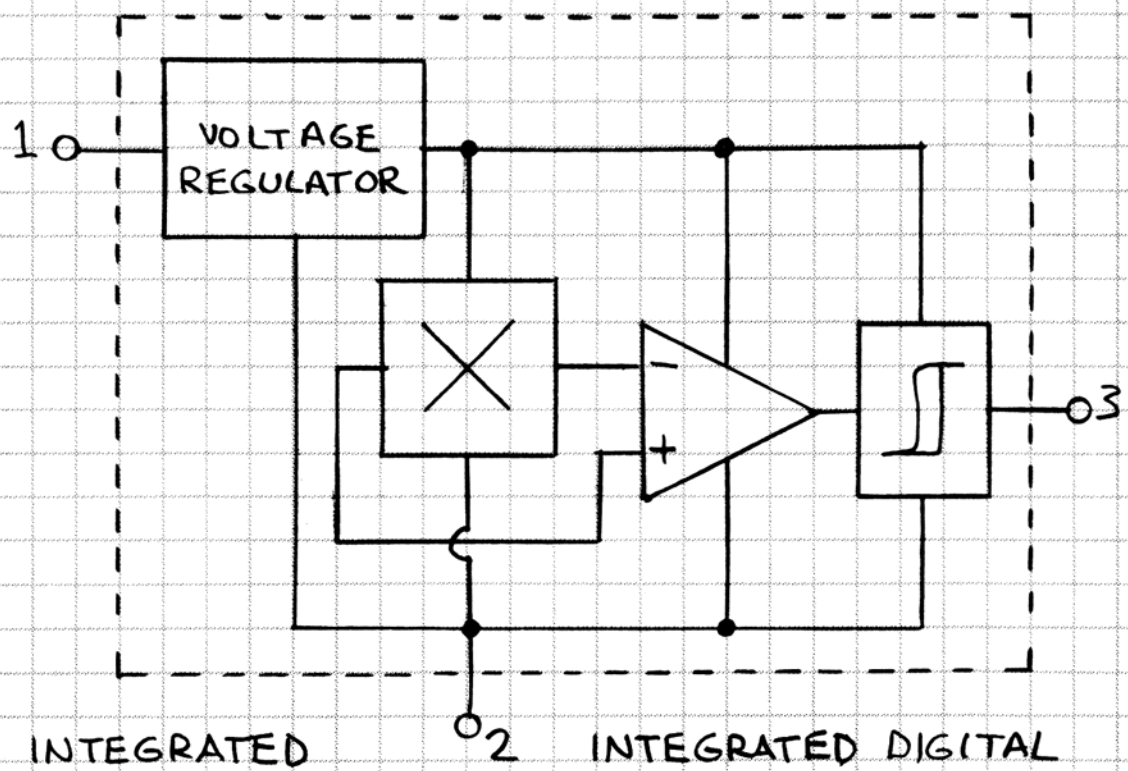

INTEGRATED DIGITAL HALL SENSOR PIN DESIGNATIONS:
1. + SUPPLY
2. GROUND
3. OUTPUT

INTEGRATED DIGITAL HALL SENSORS USUALLY INCLUDE AN OUTPUT TRANSISTOR BETWEEN THE SCHMITT TRIGGER. SOME STAY "ON" (LATCHED) WHEN MAGNET REMOVED.

HALL SENSOR + AMPLIFIER

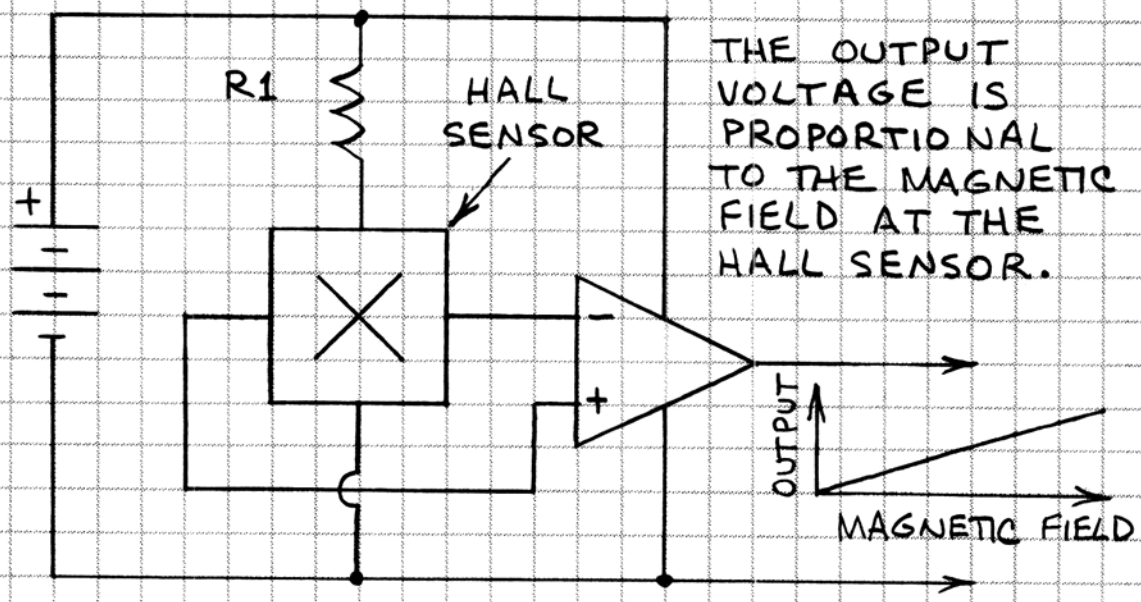

THE OUTPUT VOLTAGE IS PROPORTIONAL TO THE MAGNETIC FIELD AT THE HALL SENSOR.

INTEGRATED LINEAR HALL SENSOR

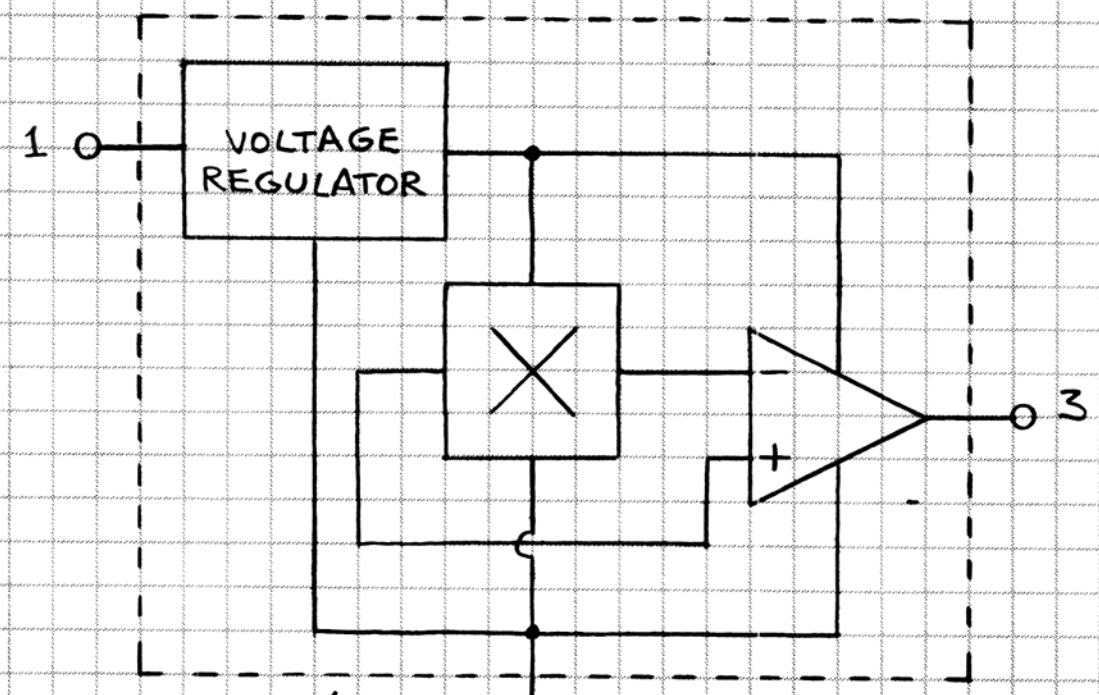

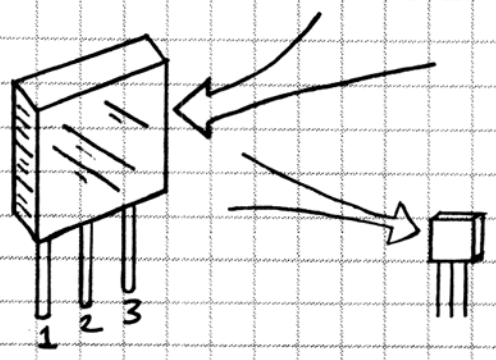

ACTUAL SIZE HALL SENSOR

INTEGRATED LINEAR HALL SENSOR PIN DESIGNATIONS:
1. + SUPPLY
2. GROUND
3. OUTPUT

HALL SENSOR SPECIFICATIONS

HERE ARE KEY SPECIFICATIONS FOR SOME OF THE MOST POPULAR HALL SENSORS.

ALL SENSORS CAN ACCEPT UNLIMITED MAGNETIC FLUX DENSITY. DO NOT EXCEED MAXIMUM SUPPLY VOLTAGE.	MINIMUM SUPPLY (VOLTS)	MAXIMUM SUPPLY (VOLTS)	OUTPUT CURRENT (mA)
A3515 RATIOMETRIC SENSOR	4.5	8	10
A3141 UNIPOLAR SWITCH	4.5	24	25
UGX3132 BIPOLAR SWITCH	4.5	24	25
A3187 LATCHING SWITCH	3.8	30	25
UGQ5140 POWER SWITCH	4.5	24	300
A3422 DIRECTION SENSOR	4.5	18	30
ATS610 GEAR TOOTH SENSOR	4.5	16	25

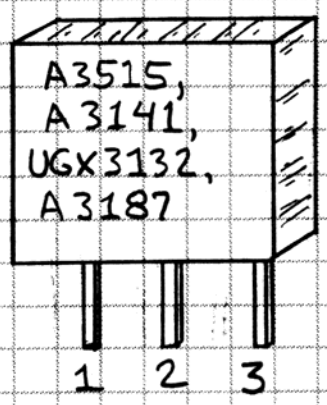

1 – POSITIVE (+) SUPPLY
2 – GROUND
3 – OUTPUT

PIN OUTLINE SHOWN FROM BRANDED (FRONT) SIDE. NOTE THAT ONLY PART OF SENSOR NUMBER MAY BE MARKED ON THE IC. SUFFIX MAY BE PRESENT (e.g. A3141LL IS A3141 WITH "LONG LEADS").

BASIC GAUSS METER

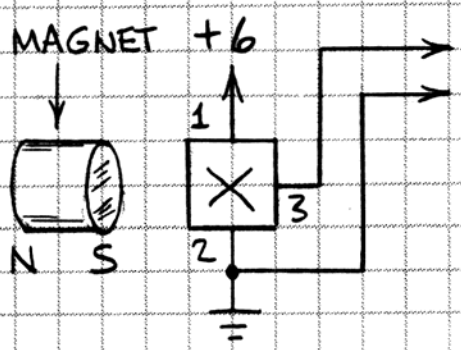

TO DIGITAL MULTITESTER (SET TO MEASURE MILLIVOLTS)

USE THE A3515 RATIOMETRIC HALL SENSOR. WITH NO MAGNET THE OUTPUT IS 1/2 THE SUPPLY VOLTAGE. THE N POLE OF A MAGNET INCREASES THE OUTPUT. THE S POLE DECREASES THE OUTPUT.

OUTPUT CHANGES 25 MILLIVOLTS PER GAUSS.

POWER HALL SENSOR

MOST HALL SENSORS CANNOT DIRECTLY DRIVE AN INCANDESCENT LAMP, RELAY, SMALL MOTOR OR OTHER DEVICE THAT DRAWS MORE THAN 10 TO 25 mA. FOR THESE LOADS AN EXTERNAL DRIVE TRANSISTOR IS REQUIRED. THE UGQ5140 HALL SENSOR INCLUDES A BUILT-IN DRIVE TRANSISTOR THAT CAN CONTINUOUSLY SINK UP TO 300 mA. THIS POWER HALL SENSOR WILL BRIEFLY SINK UP TO 900 mA TO ALLOW TIME FOR A LAMP TO WARM UP TO ITS RATED OPERATING CURRENT.

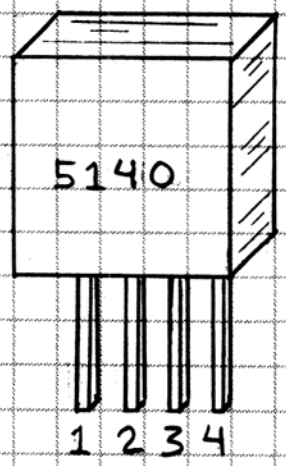

PIN 1 - SUPPLY (+4.5 TO 28V)
PIN 2 - OUTPUT (300 mA MAXIMUM)
PIN 3 - DIODE *
PIN 4 - GROUND

* THE DIODE PIN CAN BE USED FOR AN OPTIONAL LAMP TEST FUNCTION.

HALL LAMP DRIVER

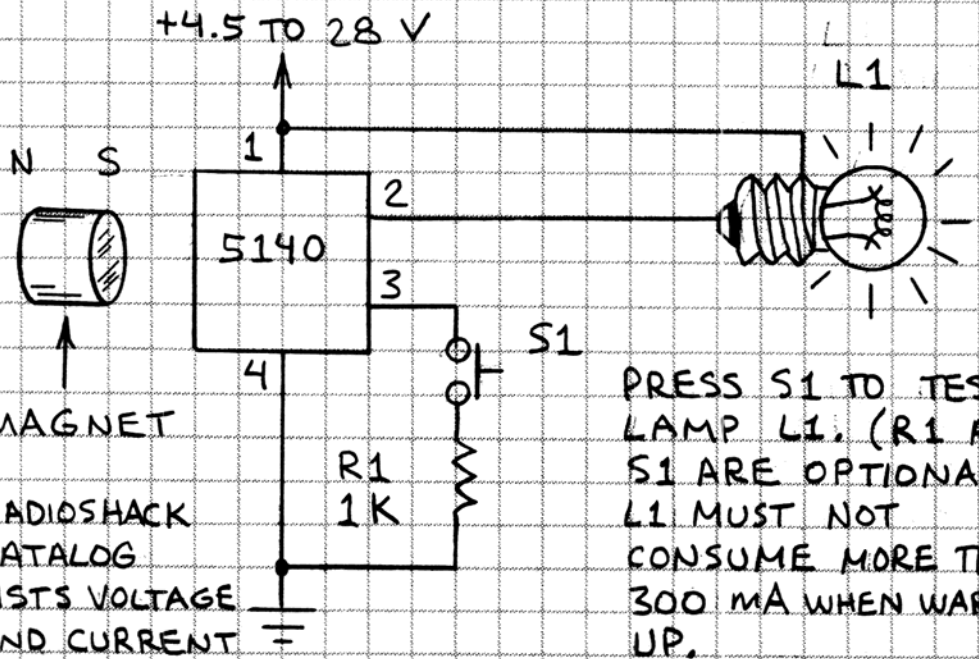

RADIOSHACK CATALOG LISTS VOLTAGE AND CURRENT FOR MANY LAMPS.

PRESS S1 TO TEST LAMP L1. (R1 AND S1 ARE OPTIONAL.) L1 MUST NOT CONSUME MORE THAN 300 mA WHEN WARMED UP.

HALL SENSOR OPERATING TIPS

HALL SENSORS ARE VERY EASY TO USE. THEY ARE UNAFFECTED BY DIRT AND GREASE THAT CAN DISABLE OPTOELECTRONIC SENSORS. THEY WORK OVER A VERY WIDE TEMPERATURE RANGE (TYPICALLY -40°C TO +85°C). EXTREMELY HIGH MAGNETIC FIELD INTENSITIES WILL NOT HARM HALL SENSORS.

HALL SENSORS ARE VERY SENSITIVE TO MECHANICAL STRESS AND EXCESS SUPPLY VOLTAGE. THEREFORE IT'S VERY IMPORTANT TO OBSERVE THE FOLLOWING GUIDELINES WHEN INSTALLING AND USING HALL SENSORS:

POWER SUPPLY — IT'S BEST TO POWER HALL SENSORS AT THE LOWEST ALLOWABLE VOLTAGE. NEVER EXCEED THE MAXIMUM ALLOWABLE!

MOUNTING HALL SENSORS — HALL SENSORS ARE OFTEN ATTACHED TO A SURFACE WITH ADHESIVE. FOR BEST RESULTS, USE A FILLED EPOXY. NEVER USE CYANOACRYLATE GLUE! THIS GLUE SHRINKS AND CAN EASILY CAUSE ENOUGH MECHANICAL STRAIN TO CHANGE THE HALL SENSOR'S OUTPUT.

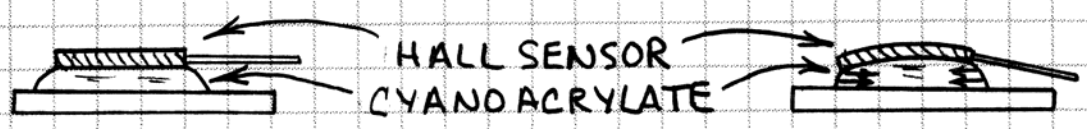

ORIGINAL PLACEMENT OF HALL SENSOR

CEMENT SHRINKS AND BENDS HALL SENSOR

ENCAPSULATING HALL SENSORS — AS WHEN CEMENTING HALL SENSORS TO A SURFACE, ENCAPSULATING A HALL SENSOR IN POTTING COMPOUND OR EPOXY CAN CAUSE MECHANICAL STRESS THAT ALTERS THE SENSOR'S OUTPUT. CHANGING THE TEMPERATURE OF ENCAPSULATED HALL SENSORS CAN ALSO CAUSE MECHANICAL STRESS. THEREFORE IT'S BEST NOT TO ENCAPSULATE HALL SENSORS.

HALL SENSOR-MAGNET SEPARATION

IDEALLY, THE STRENGTH OF A MAGNETIC FIELD IS INVERSELY PROPORTIONAL TO THE SQUARE OF THE DISTANCE FROM THE MAGNET. AT 3 CM THE STRENGTH OF THE FIELD SHOULD BE ABOUT $1/3^2$ OR 1/9 THE VALUE AT 1 CM. AS THIS GRAPH SHOWS, IN THE "REAL WORLD" THIS RELATIONSHIP IS NOT SO IDEAL — OR AT LEAST NOT EASILY MEASURED.

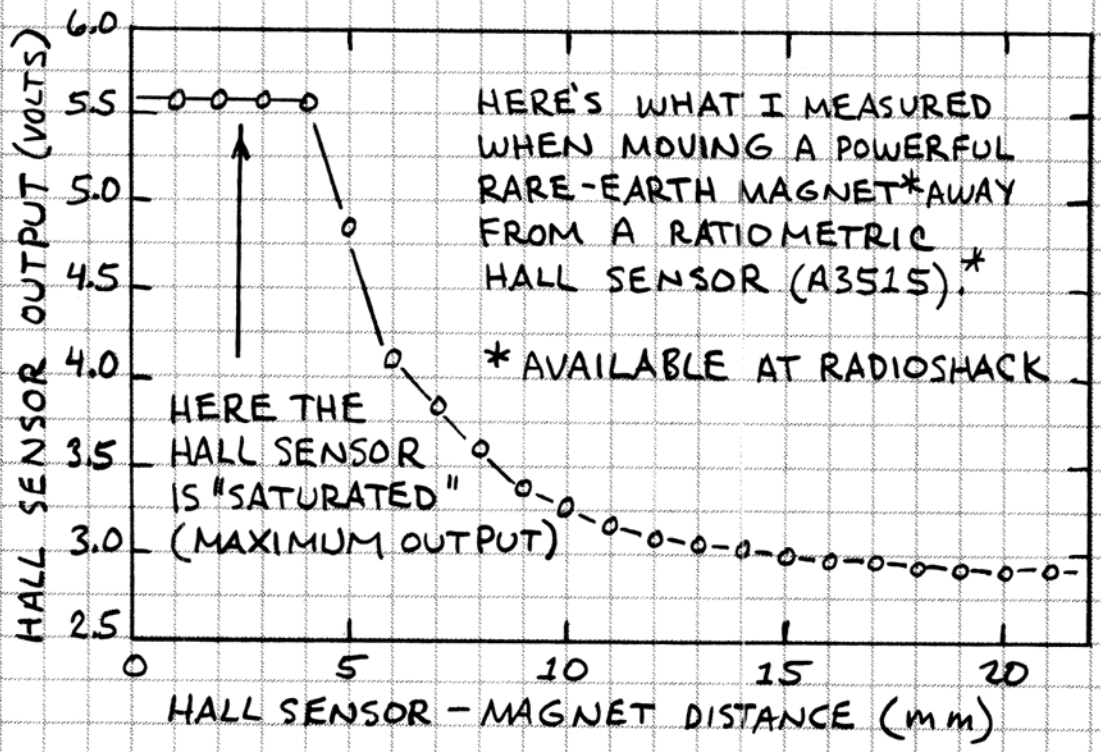

FLUX CONCENTRATORS

FLUX CONCENTRATORS, MADE FROM LOW-CARBON STEEL GUIDE, OR CONCENTRATE A MAGNETIC FIELD. STEEL NAILS CAN BE USED AS EXPERIMENTAL FLUX CONCENTRATORS. FOR BEST RESULTS, THE DIAMETER OF THE CONSTRICTED END OF A FLUX CONCENTRATOR SHOULD APPROXIMATE THAT OF THE HALL SENSOR CHIP.

EXPERIMENTAL STEEL NAIL FLUX CONCENTRATOR

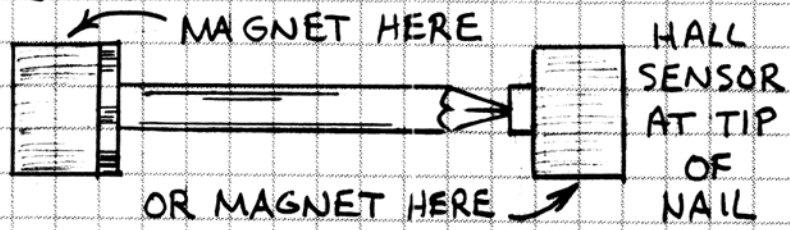

BEST MAGNET ARRANGEMENTS

IT'S IMPORTANT TO PLAN AHEAD WHEN DESIGNING HALL EFFECT CIRCUITS. IT'S USUALLY BEST TO MAKE A TEST CIRCUIT BEFORE BUILDING YOUR FINAL DESIGN. THIS WILL ALLOW YOU TO TEST THE CIRCUIT'S RESPONSE TO VARIOUS MAGNETS AND MAGNETIC FIELDS.

HEAD-ON OPERATION

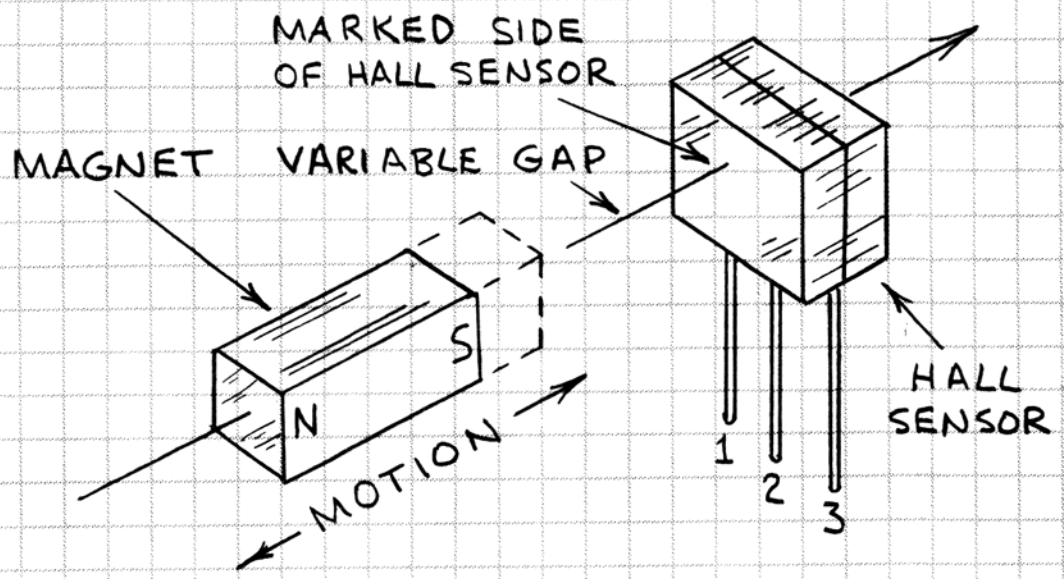

SLIDE-BY OPERATION

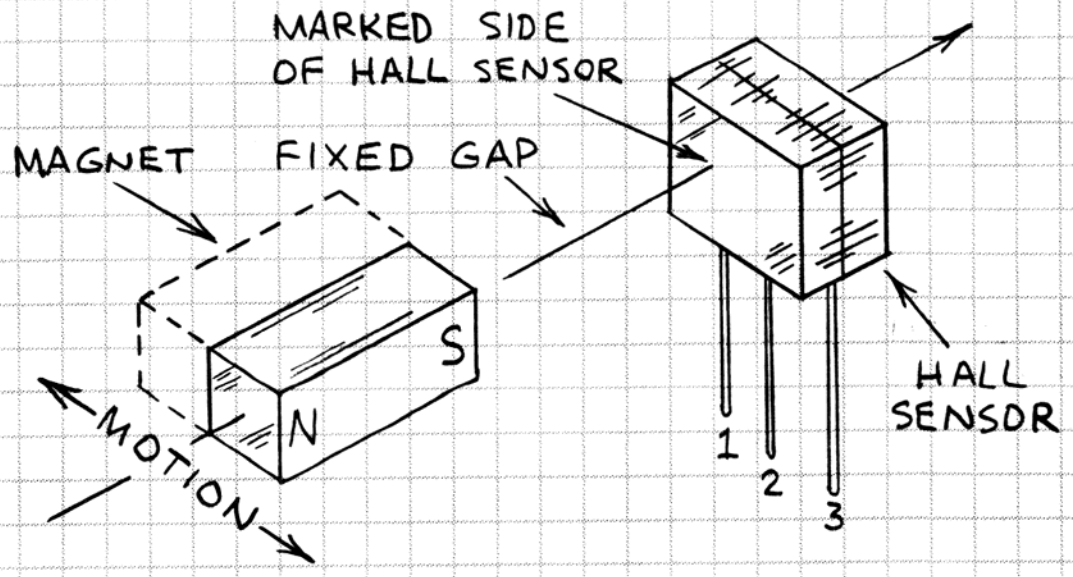

PUSH-PUSH OPERATION

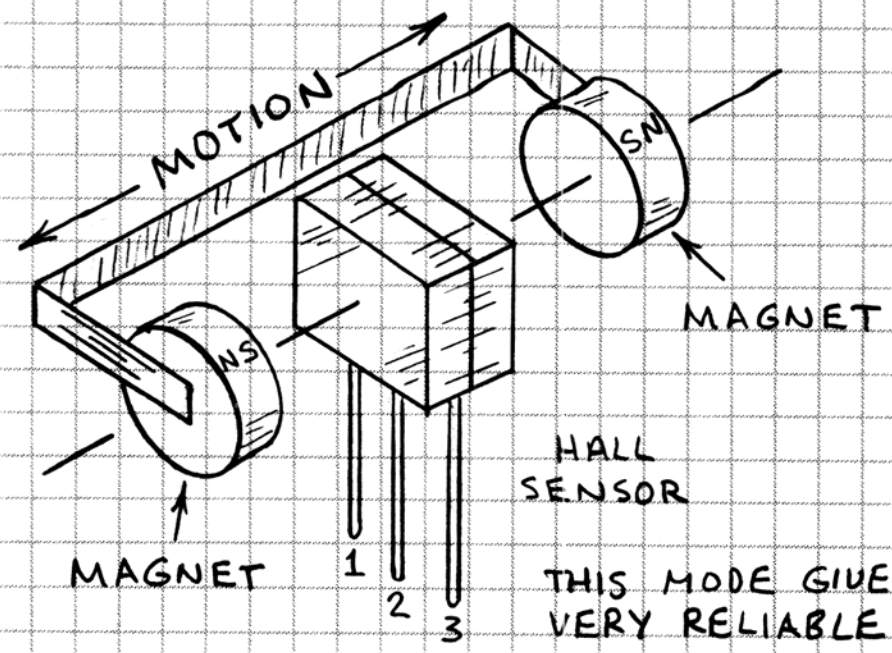

THIS MODE GIVES VERY RELIABLE SWITCHING.

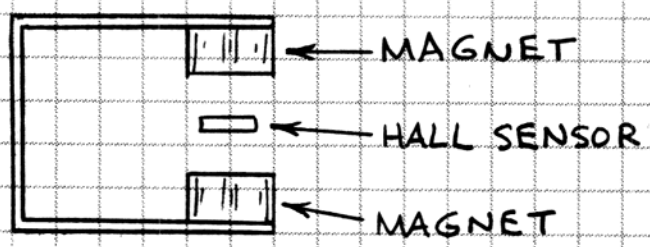

INSTALL MAGNETS ON MOVABLE FRAME. OK TO GLUE MAGNETS TO THE FRAME.

PUSH-PULL OPERATION

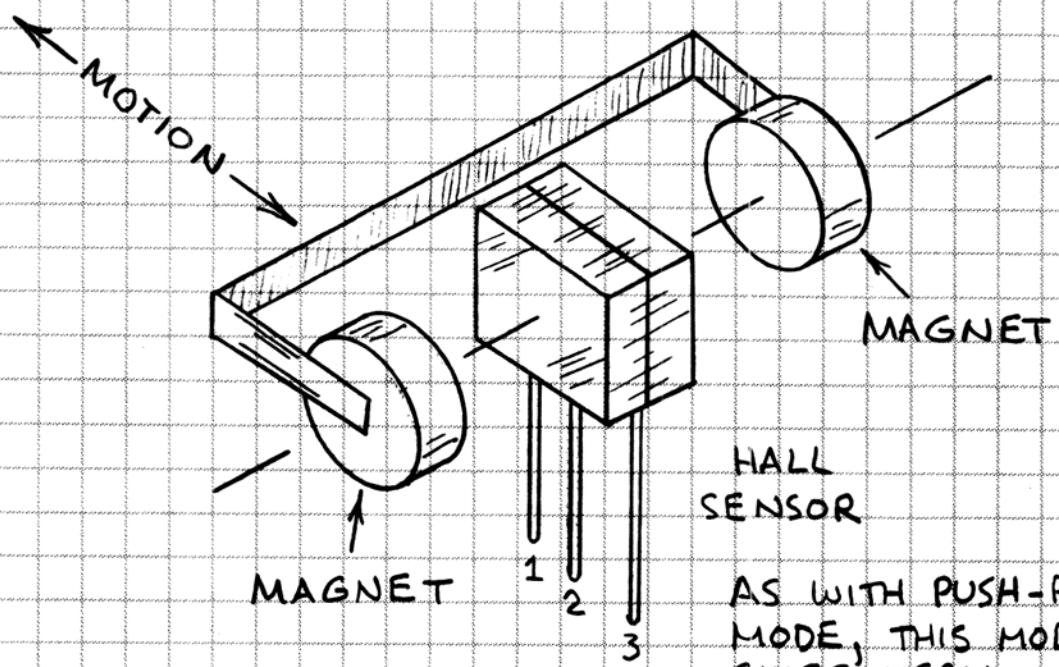

AS WITH PUSH-PUSH MODE, THIS MODE GIVES VERY RELIABLE SWITCHING.

INTERFACING DIGITAL HALL SENSORS

APPLICATIONS SHOWN HERE DESCRIBE OPERATION WITH UGX3132. THESE INTERFACE CIRCUITS ALSO WORK WITH A3141, A3187, ETC.

LED INTERFACE

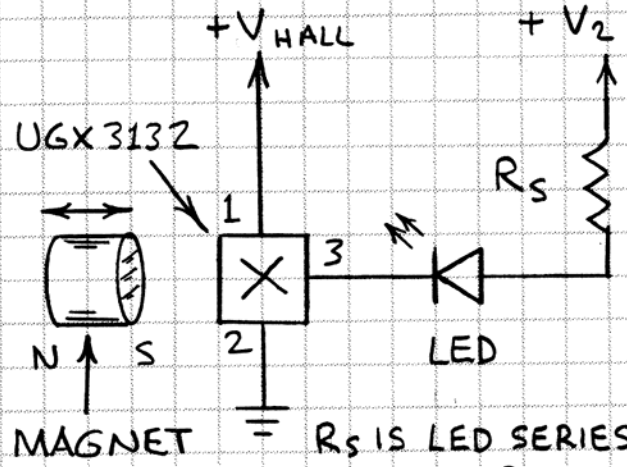

THE LED GLOWS WHEN SOUTH POLE OF MAGNET IS NEAR THE HALL SENSOR. LED SWITCHES OFF WHEN NORTH POLE OF MAGNET IS NEAR THE HALL SENSOR.

R_S IS LED SERIES RESISTOR.

$$R_S = \frac{V_2 - V_{LED}}{I_{LED}}$$

V_{LED} FOR MOST VISIBLE LEDs IS 2 TO 3 VOLTS. FOR I_{LED} (LED CURRENT) OF 10 mA AND V_2 OF 6 VOLTS, R_S = (6V-3V)/0.01 = 300 OHMS. OK TO USE 270 TO 330 OHMS IN MOST APPLICATIONS.

TRANSISTOR INTERFACE

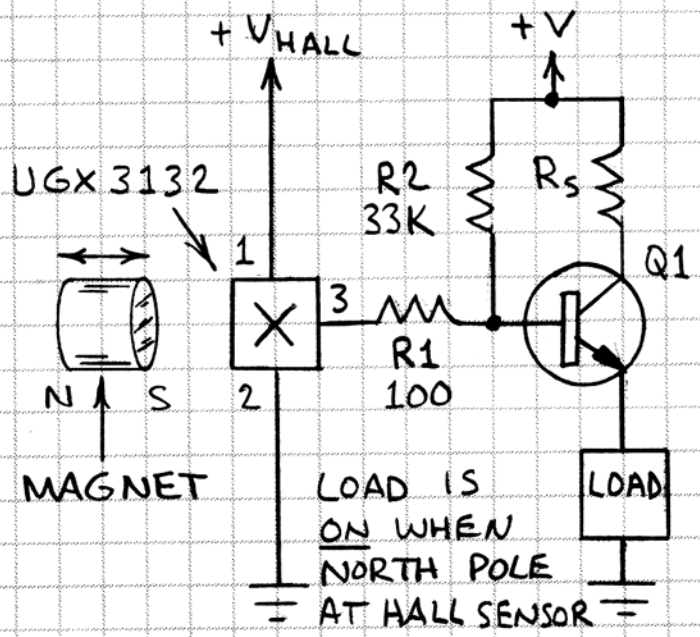

Q1 IS NPN SWITCHING TRANSISTOR (2N2222, MPS2222, ETC.). LOAD IS LAMP, RELAY, ETC. SELECT R_S TO KEEP CURRENT THROUGH Q1 BELOW MAXIMUM ALLOWABLE. LOAD SWITCHES OFF WHEN SOUTH POLE OF MAGNET IS NEAR HALL SENSOR.

TTL LOGIC INTERFACE

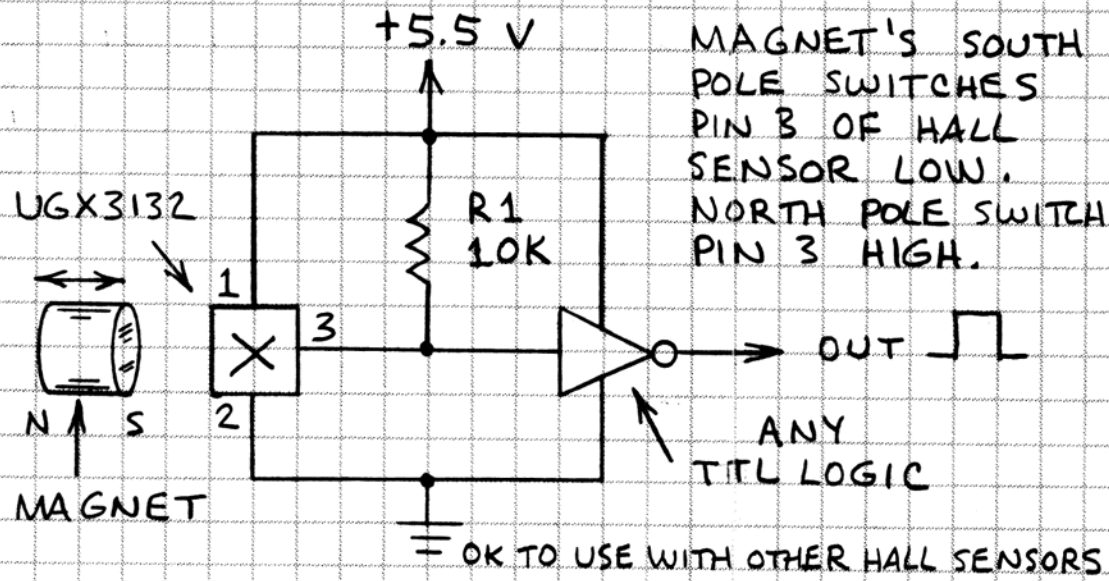

THIS CIRCUIT WORKS WITH OLDER TTL AND NEWER LOW-POWER TTL LOGIC. THE HALL SUPPLY VOLTAGE SHOULD MATCH THE TTL SUPPLY VOLTAGE.

CMOS LOGIC INTERFACE

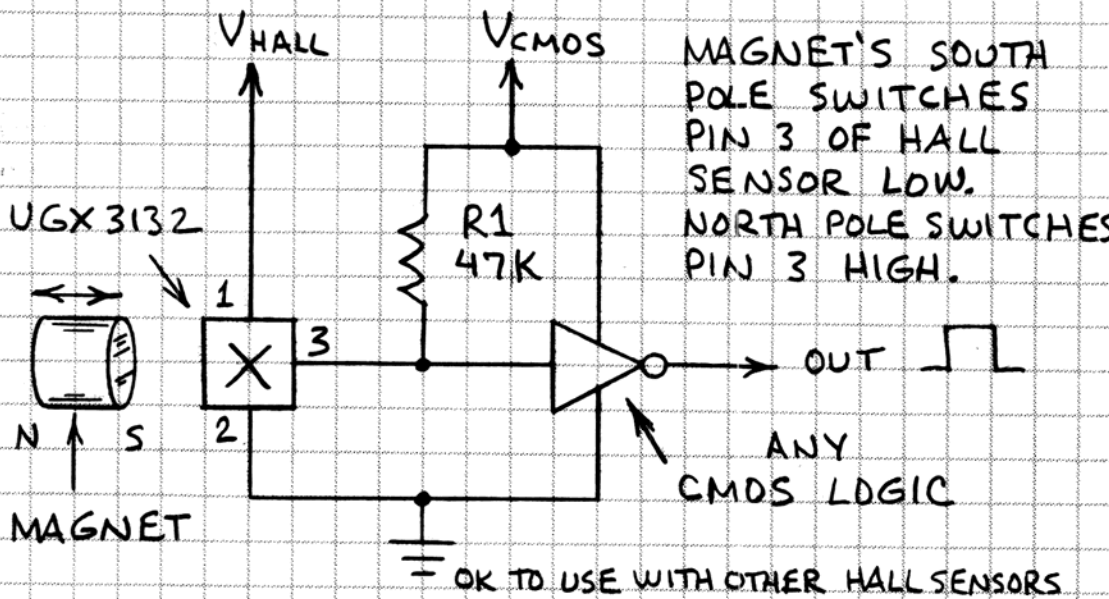

BEST TO POWER HALL SENSOR AND CMOS LOGIC FROM SAME SUPPLY WHEN POSSIBLE. IF NOT, KEEP HALL SUPPLY VOLTAGE AT OR BELOW CMOS SUPPLY VOLTAGE. BE SURE TO FOLLOW CMOS HANDLING PRECAUTIONS.

FERROUS METAL INDICATOR

THIS SIMPLE CIRCUIT INDICATES WHEN A FERROUS METAL OBJECT IS WITHIN 1 cm OR SO FROM A HALL SENSOR.

INSTALL CIRCUIT IN A PLASTIC ENCLOSURE. ATTACH HALL SENSOR TO INSIDE SURFACE.

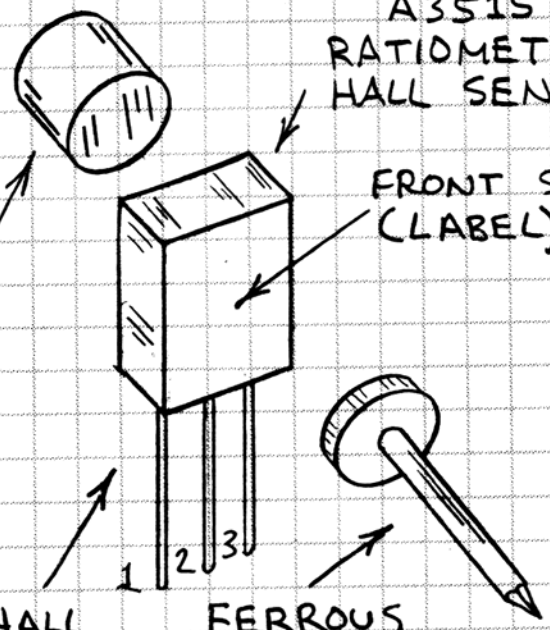

BIAS MAGNET

ADJUST SENSITIVITY

HALL SENSOR

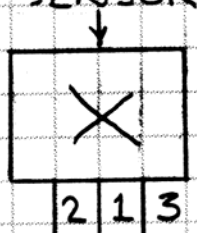

FERROUS OBJECT

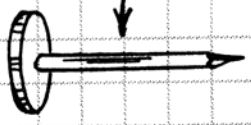

TIP:
LED 1 = GREEN
LED 2 = RED

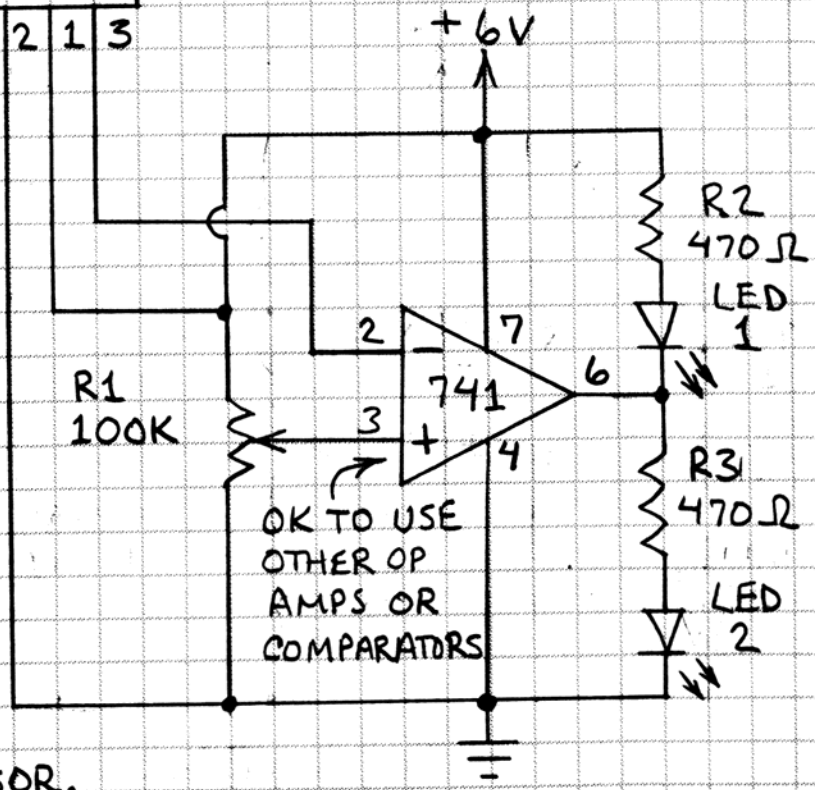

WITH MAGNET SEVERAL mm (ABOUT 1/4-INCH) FROM HALL SENSOR, ADJUST R1 UNTIL LED 1 IS JUST OFF AND LED 2 IS ON. LED 1 WILL GLOW WHEN FERROUS METAL IS NEAR HALL SENSOR.

HALL SENSOR RELAY

THE MOVING CONTACT OF AN ELECTROMAGNETIC RELAY PRODUCES A SOMETIMES UNWANTED CLICKING SOUND AND CAN EVENTUALLY WEAR OUT OR BE CONTAMINATED WITH GREASE OR DUST. A HALL SENSOR CAN REPLACE A RELAY'S CONTACTS IN SOME APPLICATIONS.

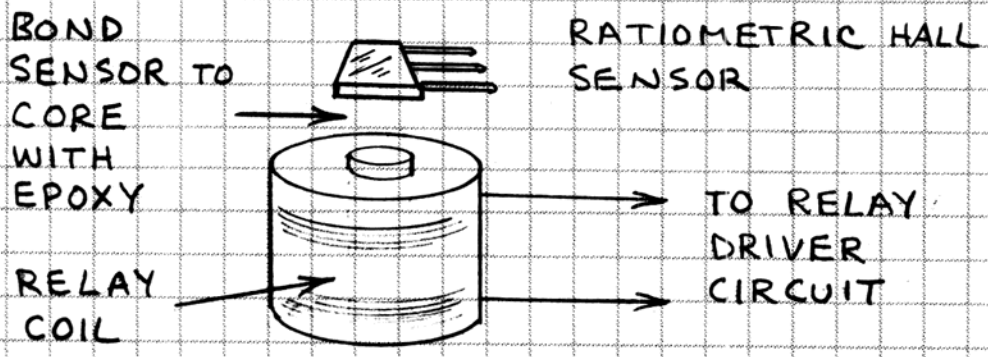

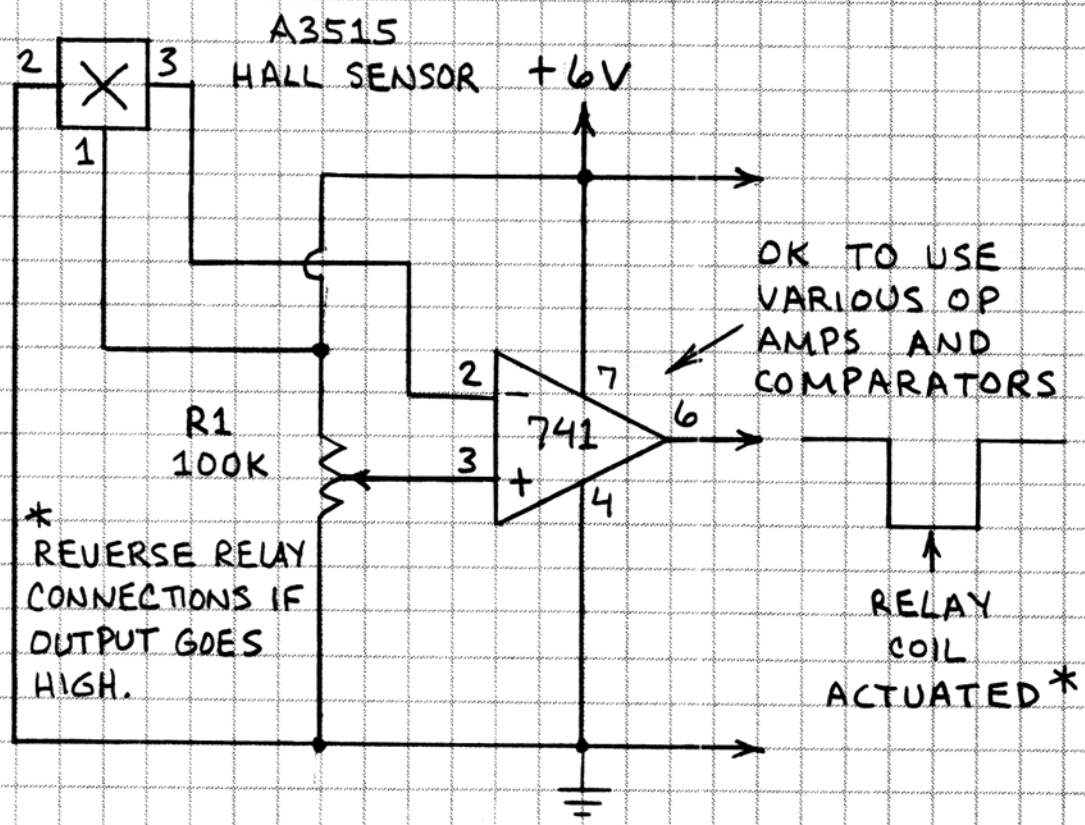

ADJUST R1 UNTIL PIN 6 JUST GOES HIGH. WHEN RELAY COIL IS ENERGIZED, PIN 6 WILL GO LOW. CHANGES IN RESIDUAL MAGNETISM OF THE RELAY'S STEEL CORE MAY NECESSITATE OCCASIONAL ADJUSTMENTS OF R1.

LEVEL INDICATOR

THIS CIRCUIT IS AN ELECTRONIC LEVEL INDICATOR THAT SENSES WHEN A ROLLING STEEL BALL IS AT REST.

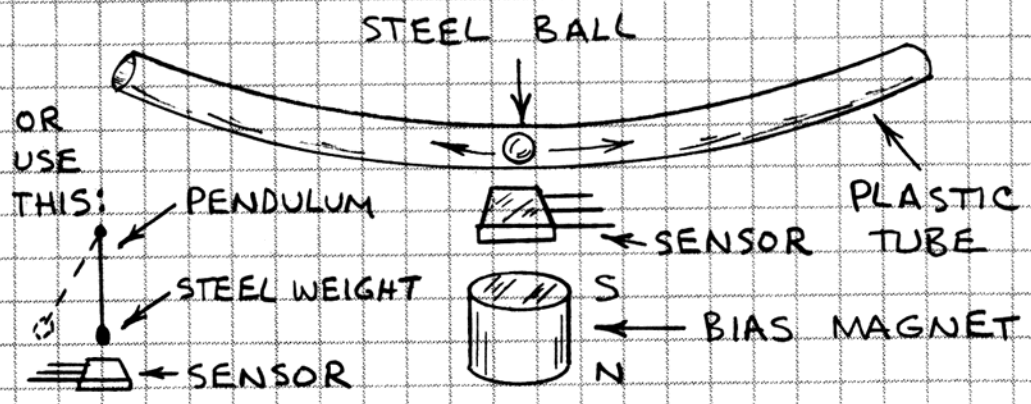

PROTOTYPE CIRCUIT USES A BB INSIDE A GENTLY BENT SODA STRAW. A SMALL BALL BEARING WILL WORK BETTER AS IT IS MORE SPHERICAL.

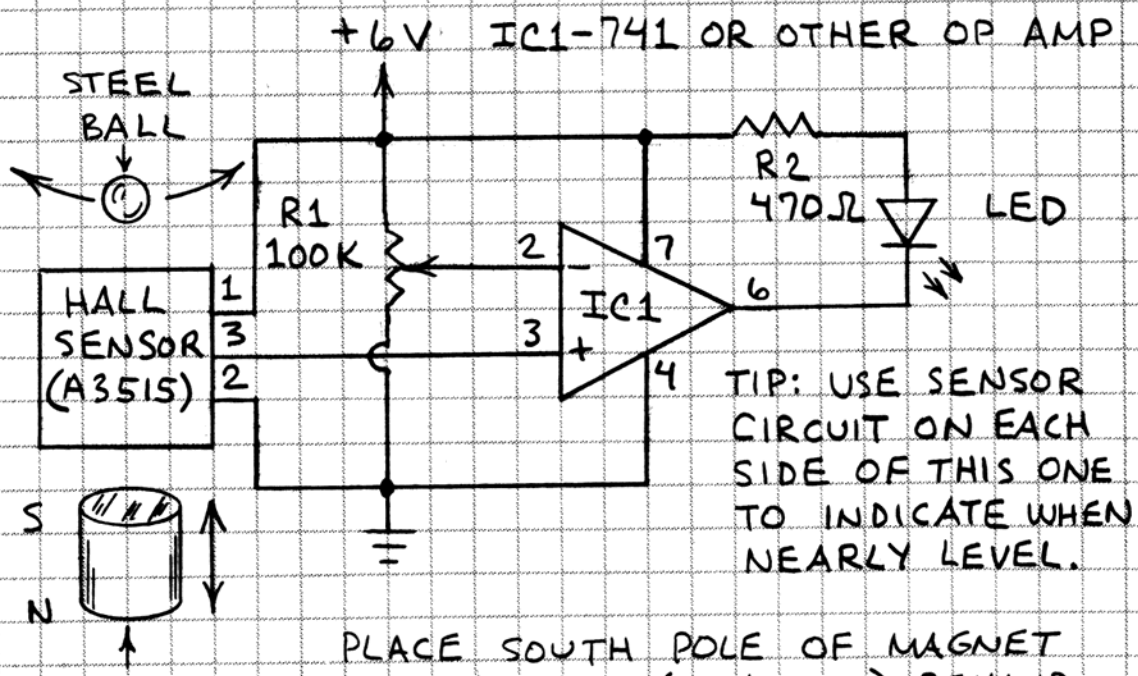

TIP: USE SENSOR CIRCUIT ON EACH SIDE OF THIS ONE TO INDICATE WHEN NEARLY LEVEL.

BIAS MAGNET

(ADJUST POSITION AS REQUIRED)

PLACE SOUTH POLE OF MAGNET ABOUT 1 cm (0.4 INCH) BEHIND HALL SENSOR. ADJUST R1 UNTIL LED JUST STOPS GLOWING. THE LED SHOULD NOW GLOW WHEN STEEL BALL APPROACHES THE HALL SENSOR. EXPERIMENT WITH POSITION OF MAGNET FOR BEST RESULTS.

MAGNET POSITION DETECTOR

THIS CIRCUIT INDICATES WHEN A MAGNET IS AT A PRESET, ADJUSTABLE DISTANCE FROM A RATIOMETRIC HALL SENSOR.

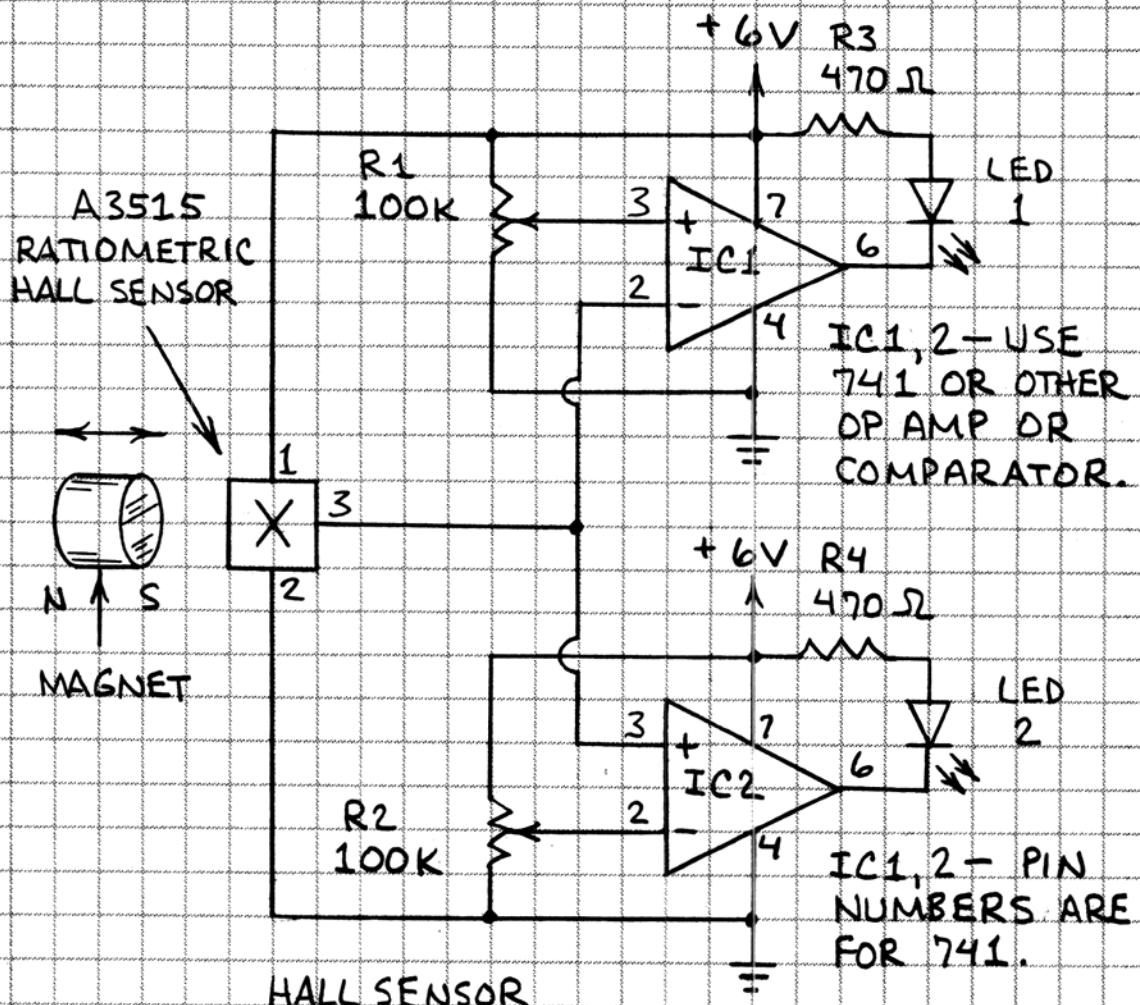

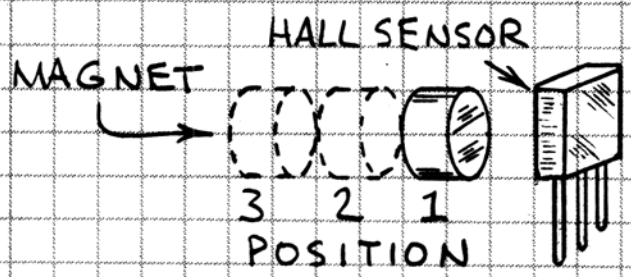

POSITION	LED 1	LED 2
SOUTH 1	ON	OFF
SOUTH 2	ON	ON
SOUTH 3	OFF	ON
NORTH 1	OFF	ON
NORTH 2	ON	ON
NORTH 3	ON	OFF

PLACE SOUTH POLE OF MAGNET UP TO 1-2 cm FROM SENSOR. ADJUST R1 AND R2 UNTIL LED1 AND LED 2 JUST GLOW. WHEN MAGNET IS MOVED TOWARD SENSOR, LED2 SWITCHES OFF. WHEN MAGNET IS MOVED AWAY, LED1 SWITCHES OFF. USE NORTH POLE OF MAGNET TO REVERSE OPERATION.

DUAL-OUTPUT HALL SENSORS

A PAIR OF BACK-TO-BACK HALL SENSORS PROVIDES A DUAL-OUTPUT MAGNET SENSOR. THIS METHOD WORKS WITH BOTH DIGITAL HALL SWITCHES AND RATIOMETRIC HALL SENSORS. RATIOMETRIC HALL SENSORS PROVIDE HIGHER SENSITIVITY.

MOUNT TWO SENSORS CLOSE TO ONE ANOTHER (TOUCHING) ON CIRCUIT BOARD AND/OR BOND TOGETHER WITH FILLED EPOXY.

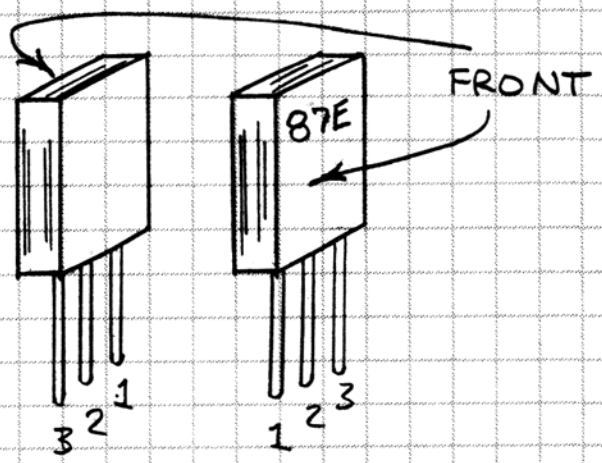

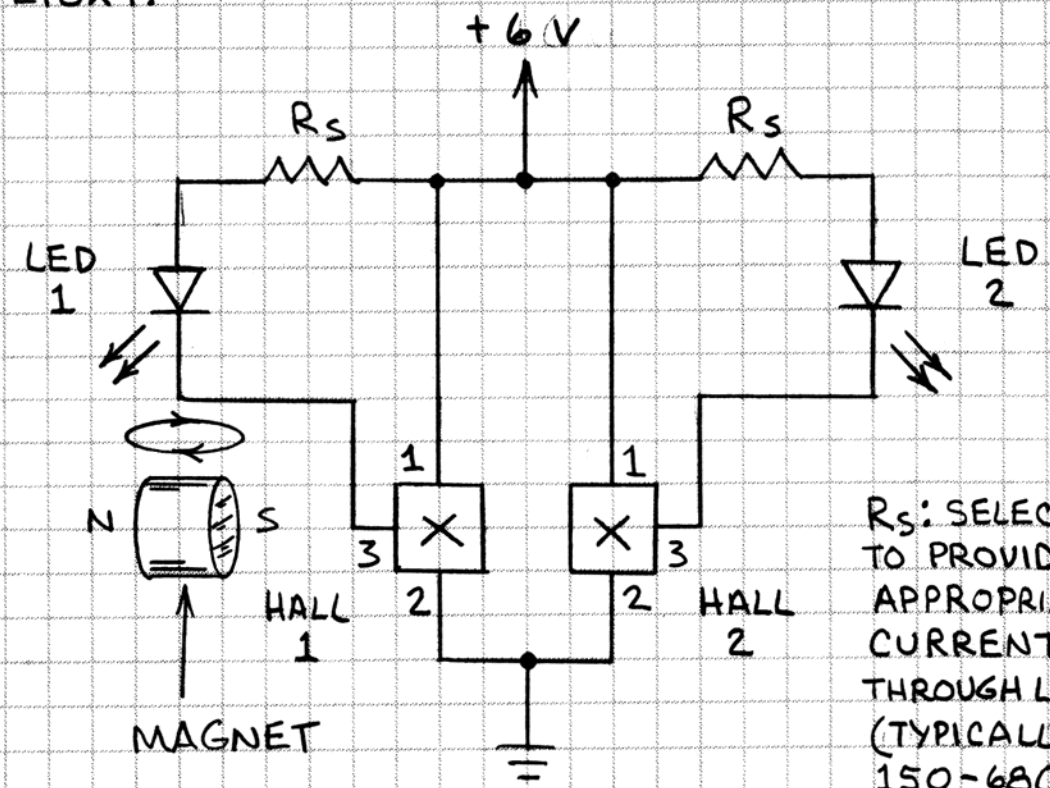

R_S: SELECT TO PROVIDE APPROPRIATE CURRENT THROUGH LED (TYPICALLY 150-680 Ω).

HALL 1, 2: A3141, A3515

POLE AT HALL 1	DIGITAL		RATIOMETRIC	
	LED 1	LED 2	LED 1	LED 2
N	OFF	ON	ON	OFF
S	ON	OFF	OFF	ON

FIELD STRENGTH BARGRAPH

A LINEAR OR RATIOMETRIC HALL SENSOR CAN MEASURE THE STRENGTH OF A MAGNETIC FIELD. THIS CIRCUIT SHOWS HOW TO USE A STACK OF DIGITAL HALL SENSORS (THREE OR MORE) TO DISPLAY MAGNETIC FIELD STRENGTH ON A BARGRAPH LED DISPLAY.

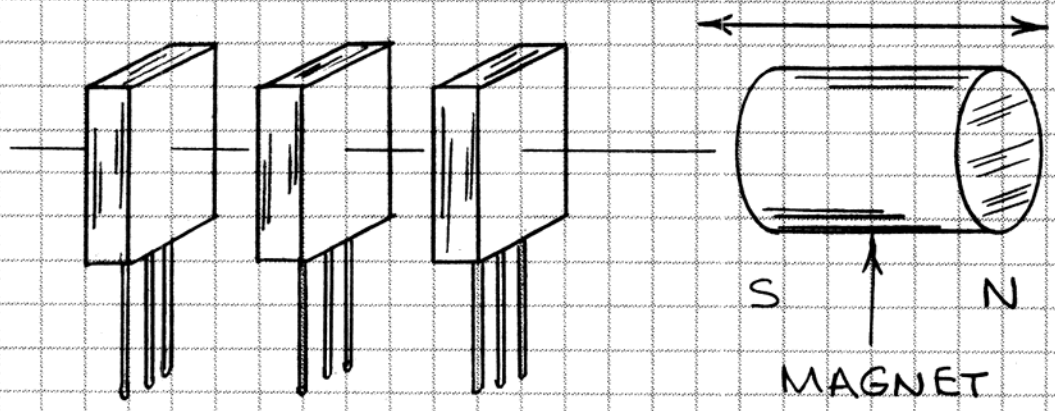

STACKED HALL SENSORS (A3141)

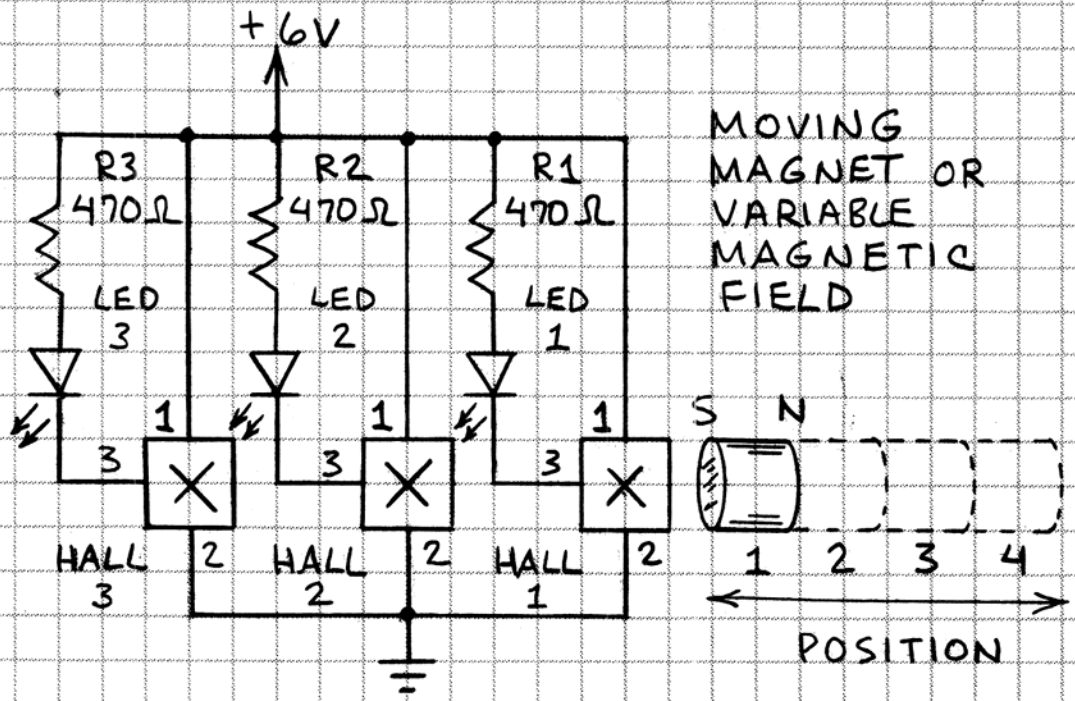

POSITION	LED 1	LED 2	LED 3
1	ON	ON	ON
2	ON	ON	OFF
3	ON	OFF	OFF
4	OFF	OFF	OFF

OK TO USE ANY COLOR LEDs. I USED RED, GREEN AND BLUE.

HALL SENSOR DIRECTION INDICATOR

TWO OR MORE HALL SENSORS ARRANGED SIDE-BY-SIDE CAN INDICATE THE DIRECTIONAL MOVEMENT OF A NEARBY MAGNET.

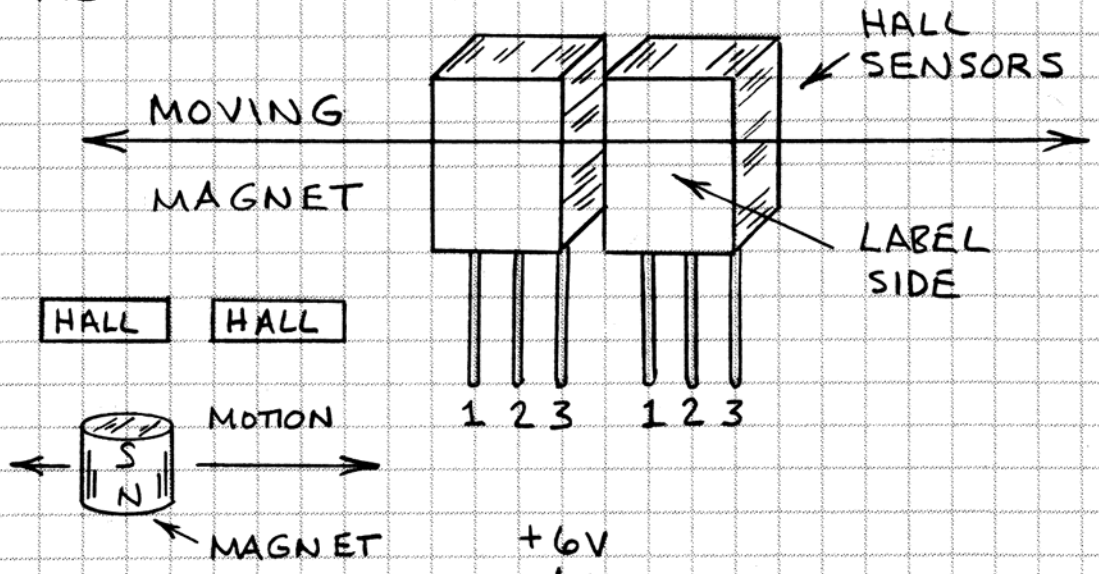

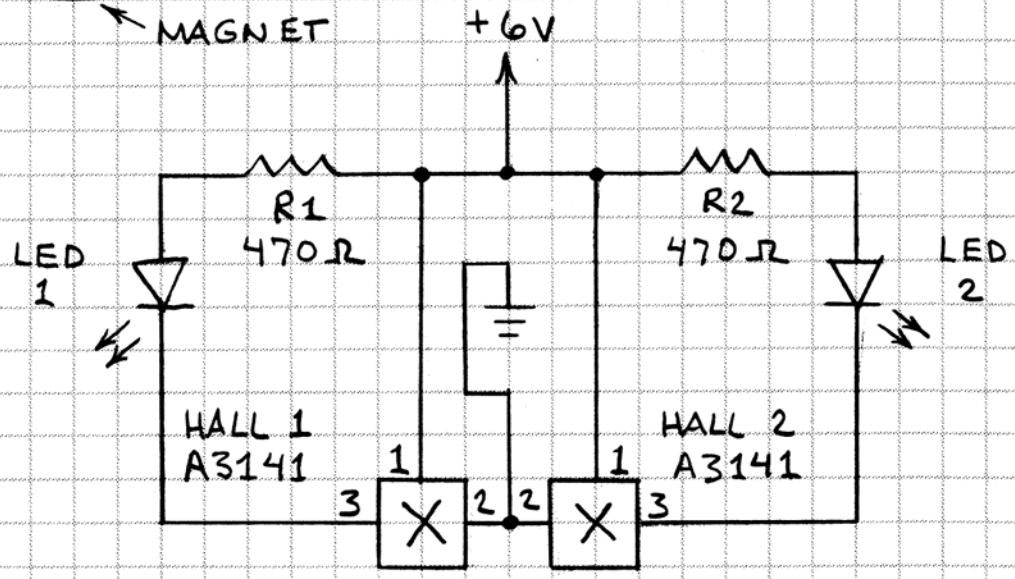

POSITION: 1 2 3 4 5

POSITION	LED 1	LED 2
1	OFF	OFF
2	ON	OFF
3	ON	ON
4	OFF	ON
5	OFF	OFF

THIS CIRCUIT DRIVES LEDs, BUT IT WILL ALSO DRIVE EXTERNAL LOGIC CIRCUITS.

ULTRA-SENSITIVE MAGNET SWITCH

A VERY SENSITIVE MAGNET SWITCH CAN BE MADE BY CONNECTING A PAIR OF BACK-TO-BACK HALL SENSORS TO AN OP AMP OR COMPARATOR.

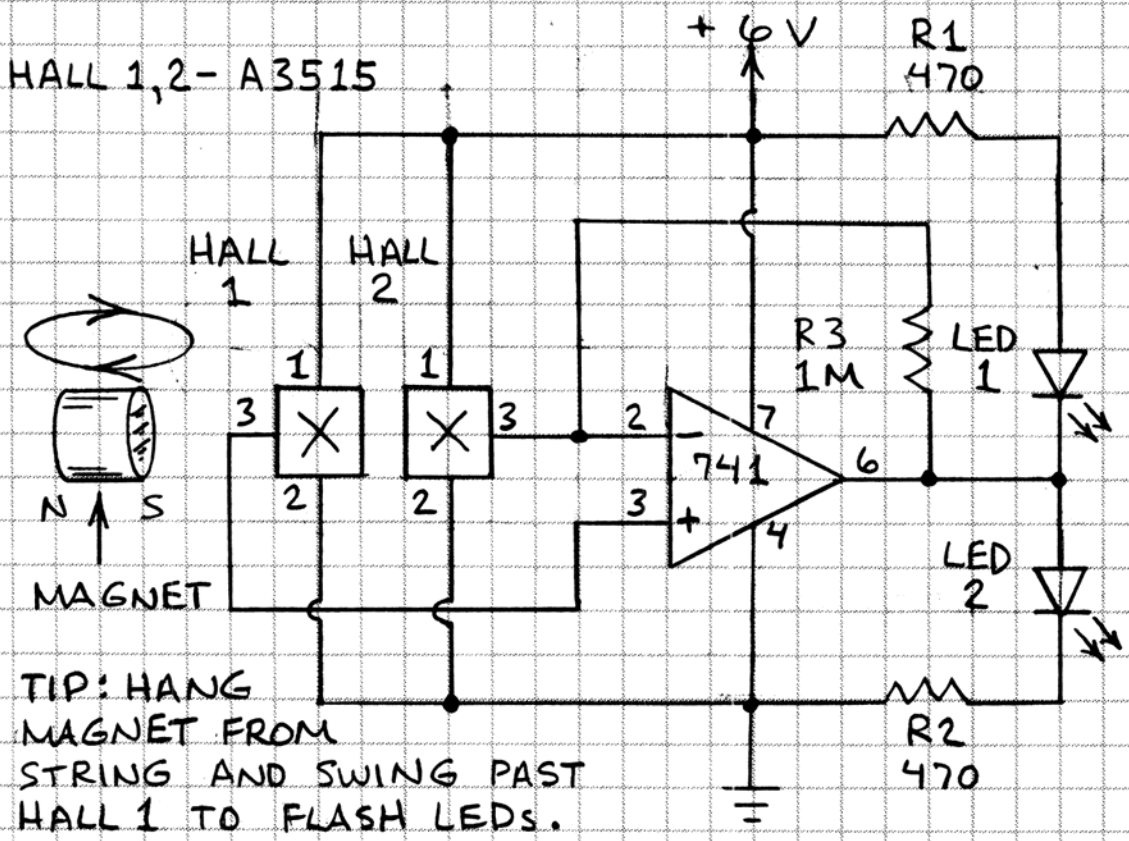

TIP: HANG MAGNET FROM STRING AND SWING PAST HALL 1 TO FLASH LEDs.

THIS CIRCUIT WILL RESPOND TO A MAGNET 15 cm (ABOUT 6 INCHES) AWAY. WITH NO MAGNET OR WHEN SOUTH POLE OF MAGNET IS NEAR HALL SENSOR 1, LED 2 GLOWS. WHEN NORTH POLE OF MAGNET IS NEAR HALL SENSOR 1, LED 1 GLOWS. USE DIFFERENT COLOR LEDs FOR LEDs 1 AND 2, EITHER INDIVIDUAL LEDs OR A BICOLOR LED.

MOUNT HALL SENSORS BACK-TO-BACK WITH FRONT SIDE OF HALL SENSOR 1 (SIDE WITH NUMBERS) CLOSEST TO WHERE MAGNET WILL BE PLACED.

THOUGH THIS CIRCUIT DRIVES LEDs, IT CAN ALSO POWER MANY OTHER DEVICES. USE APPROPRIATE INTERFACE CIRCUITRY.

MAGNET MUSIC

THE OUTPUT VOLTAGE FROM A RATIOMETRIC (LINEAR) HALL SENSOR CAN CONTROL A VOLTAGE-TO-FREQUENCY CONVERTER. THIS PROVIDES A MUSICAL TONE WHOSE FREQUENCY IS CONTROLLED BY A MAGNETIC FIELD.

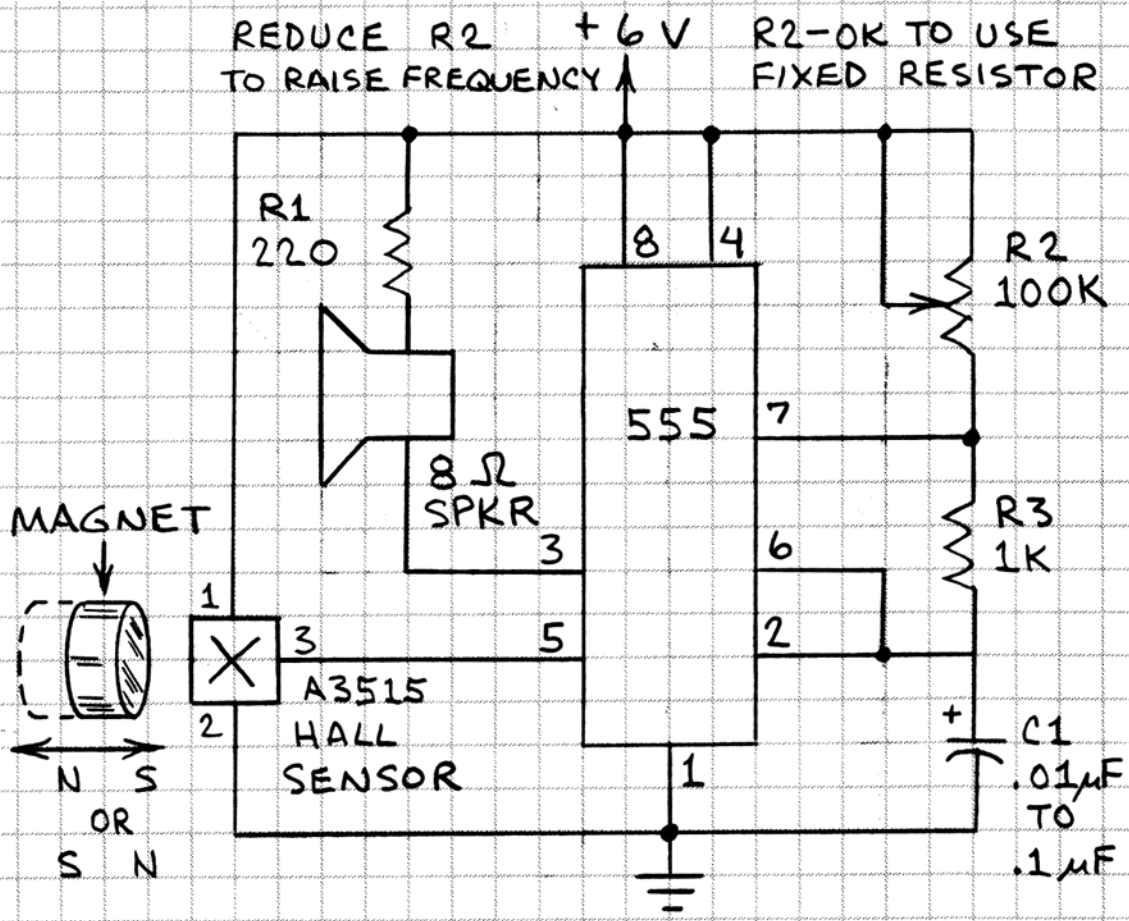

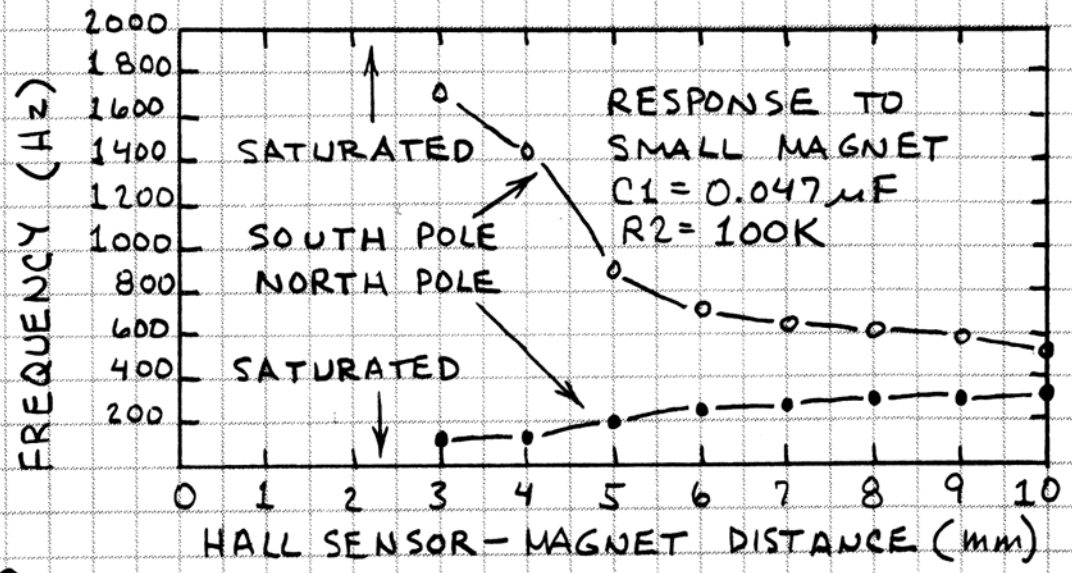

MUSICAL PENDULUM

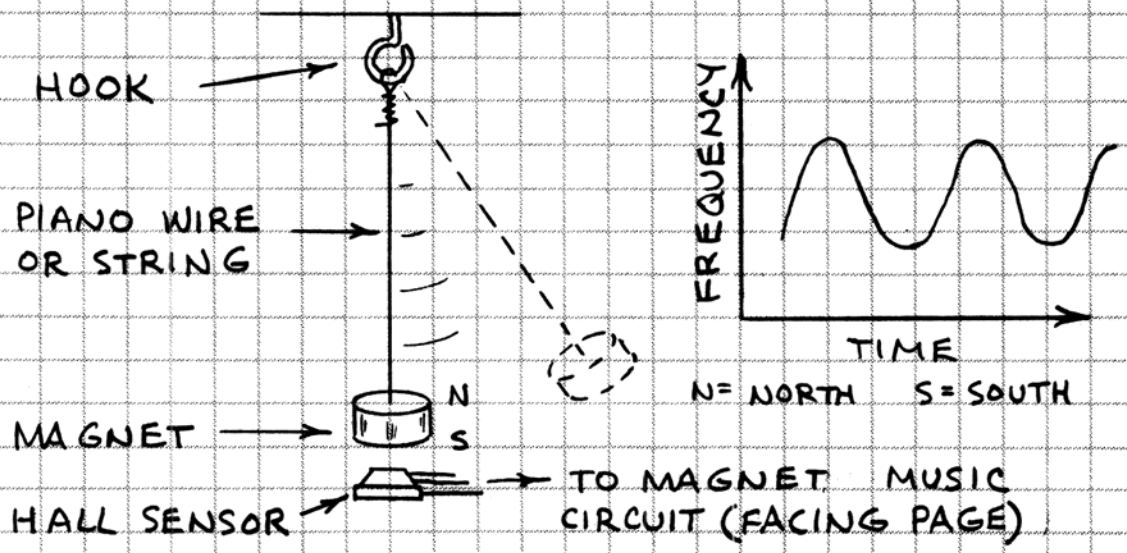

DAMPED OSCILLATING TONE

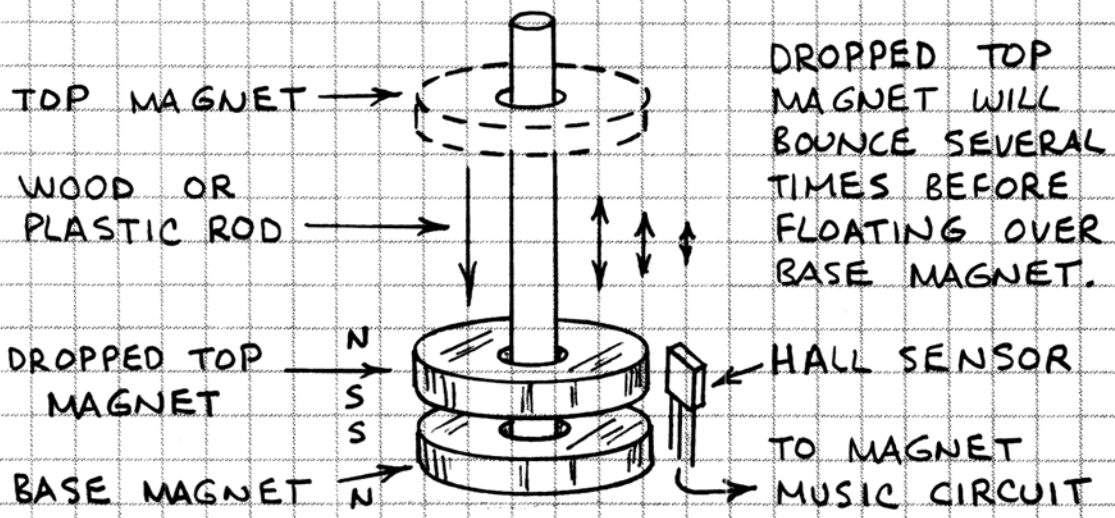

PRESSURE-SENSITIVE TONE

PRESS AND RELEASE FLOATING MAGNET (SHOWN ABOVE) OR MOUNT A MAGNET ON A FLEXIBLE BEAM AS SHOWN HERE:

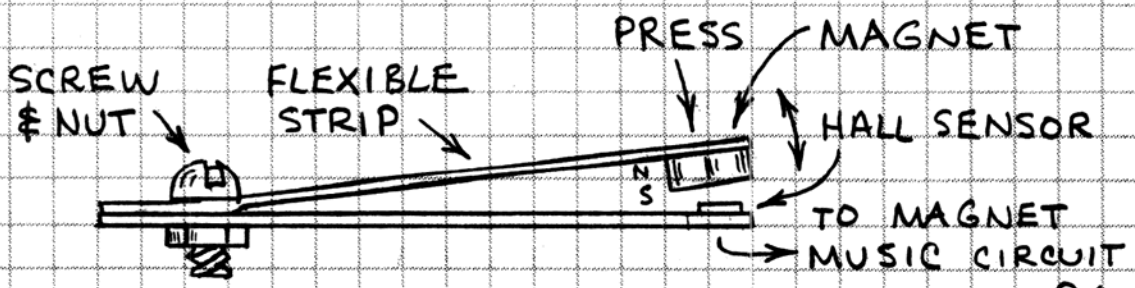

SUPER-SENSITIVE FIELD SENSOR

AN INEXPENSIVE COMPASS IS A MUCH MORE SENSITIVE DETECTOR OF MAGNETIC FIELDS THAN A HALL SENSOR. COMBINING A RATIOMETRIC HALL SENSOR WITH A COMPASS PROVIDES A SUPER-SENSITIVE MAGNETIC FIELD DETECTOR.

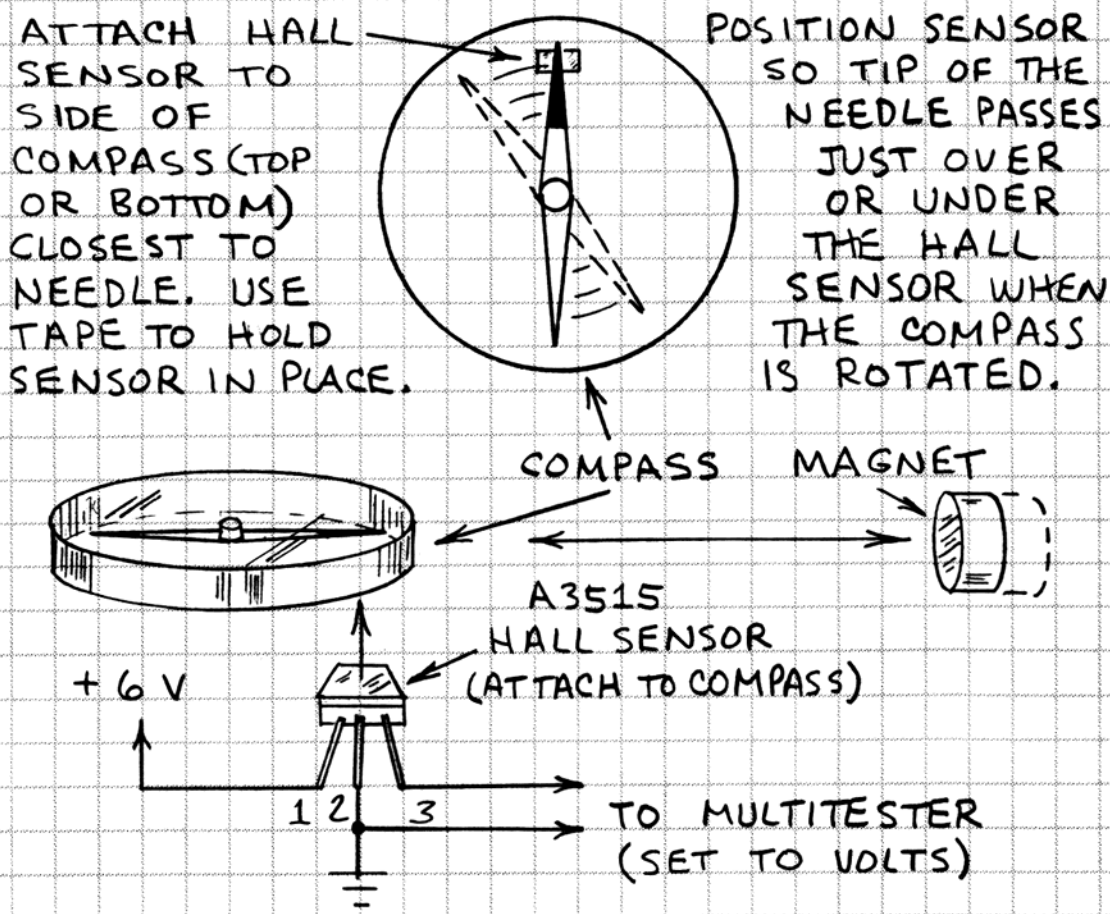

THIS ARRANGEMENT WILL DETECT MOVEMENTS OF A STRONG MAGNET MORE THAN 1 METER (ABOUT 3 FEET) AWAY FROM COMPASS. THE VOLTAGE CHANGE MAY BE ONLY ABOUT 10 MILLIVOLTS (0.010 VOLT) OR SO. SO IT'S BEST TO USE A DIGITAL MULTITESTER.

USE THIS ARRANGEMENT WITH A VOLTAGE-TO-FREQUENCY CIRCUIT TO PROVIDE A TONE THAT CHANGES FREQUENCY WHEN THE COMPASS NEEDLE MOVES PAST THE HALL SENSOR. SEE THE "MAGNET MUSIC" PROJECT IN THIS MINI-NOTEBOOK FOR DETAILS (PAGE 90).

SUPER-SENSITIVE FIELD SWITCH

THIS CIRCUIT WILL ACTIVATE AN LED WHEN A MAGNET IS PLACED UP TO 1 METER (ABOUT 3 FEET) AWAY.

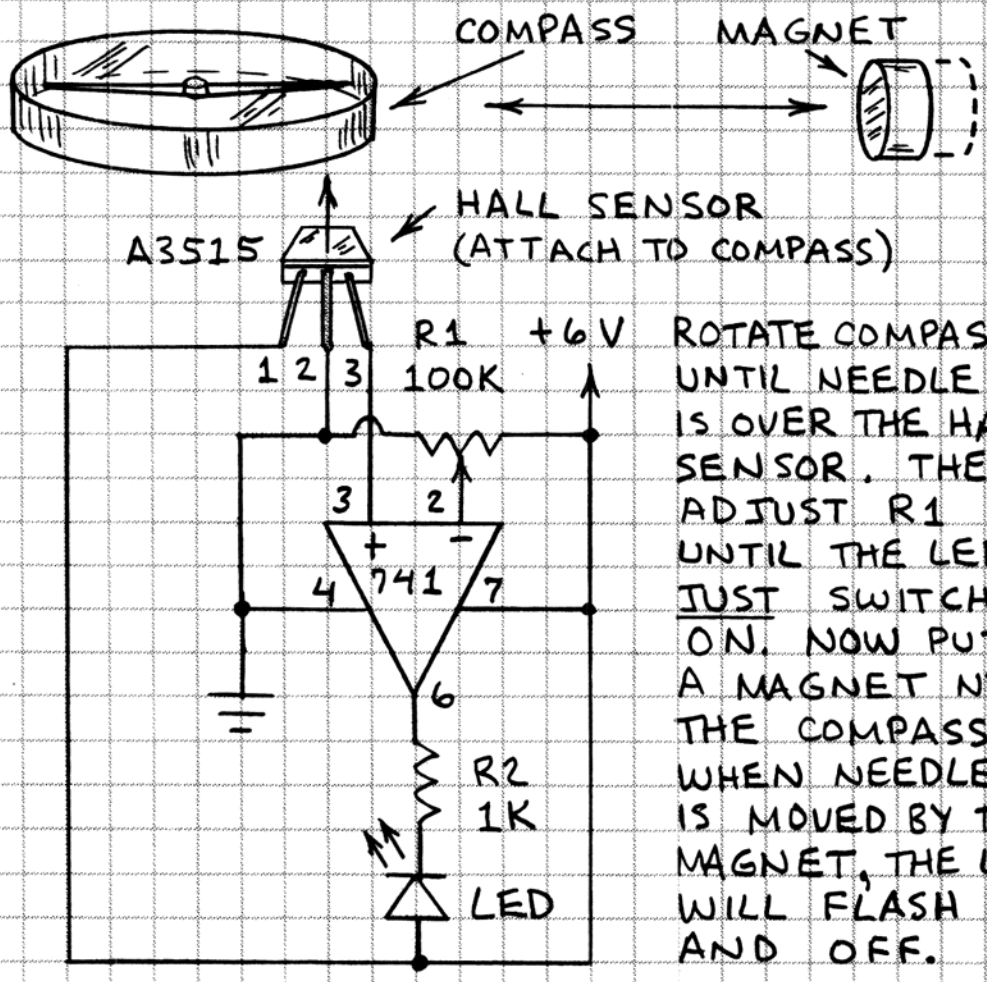

ROTATE COMPASS UNTIL NEEDLE IS OVER THE HALL SENSOR. THEN ADJUST R1 UNTIL THE LED JUST SWITCHES ON. NOW PUT A MAGNET NEAR THE COMPASS. WHEN NEEDLE IS MOVED BY THE MAGNET, THE LED WILL FLASH ON AND OFF.

ABOUT THIS CIRCUIT: THE 741 IS A LOW-COST OPERATIONAL AMPLIFIER (OP AMP) CONNECTED AS A COMPARATOR. THE OUTPUT OF A COMPARATOR IS EITHER LOW OR HIGH. IN THIS CIRCUIT, THE OUTPUT SWITCHES FROM LOW TO HIGH WHEN THE HALL SENSOR OUTPUT VOLTAGE IS ABOUT 0.01 VOLT HIGHER THAN THE VOLTAGE AT PIN 2 OF THE 741.

MANY DIFFERENT OP AMPS WILL WORK IN THIS CIRCUIT. JUST BE SURE TO CONNECT THE PROPER PINS. R2 CAN BE REDUCED TO 470 Ω. THE LED CAN BE REPLACED BY A LOW-VOLTAGE PIEZO TONE GENERATOR.

GIANT COMPASS MAGNETOMETER

GEOMAGNETIC STORMS CAUSED BY SOLAR ACTIVITY CAN CAUSE MAJOR POWER BLACKOUTS AND AURORAS. THEY ALTER EARTH'S MAGNETIC FIELD SO THAT COMPASS NEEDLES DEVIATE FROM MAGNETIC NORTH. THE GIANT COMPASS SHOWN HERE SHOULD INDICATE COMPASS DEFLECTIONS CAUSED BY GEOMAGNETIC STORMS. A SMALLER VERSION THAT INDICATES DEFLECTIONS WITH REFLECTED LIGHT WAS DESCRIBED BY RON J. LIVESEY IN "SKY & TELESCOPE" (OCT. 1989, pp. 426-432).

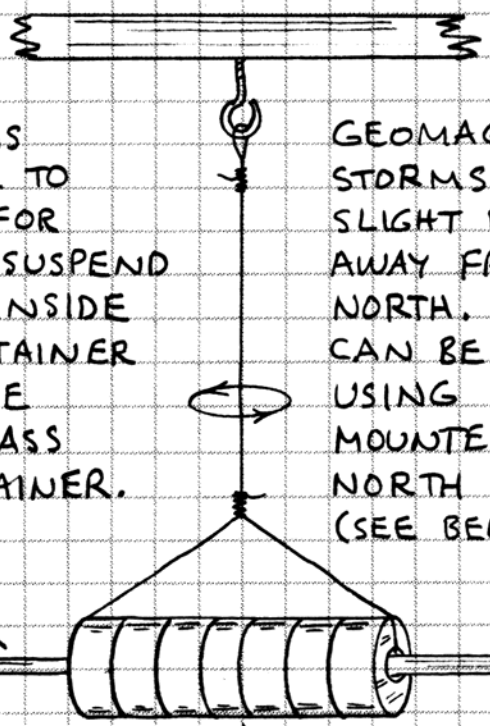

THIS COMPASS IS VERY SENSITIVE TO MOVING AIR. FOR BEST RESULTS, SUSPEND THE COMPASS INSIDE A LARGE CONTAINER OR INSTALL THE ENTIRE COMPASS INSIDE A CONTAINER.

GEOMAGNETIC STORMS WILL CAUSE SLIGHT DEFLECTIONS AWAY FROM MAGNETIC NORTH. DEFLECTIONS CAN BE MEASURED USING A SCALE MOUNTED AT THE NORTH POINTER. (SEE BELOW.)

WOOD DOWEL OR PENCIL

NORTH

AVOID VIBRATIONS NEAR COMPASS!

RADIOSHACK RING MAGNETS (5 OR MORE)

TIP: USE A SEARCH ENGINE TO FIND SOLAR ACTIVITY NEWS ON THE WEB.

CONTAINER

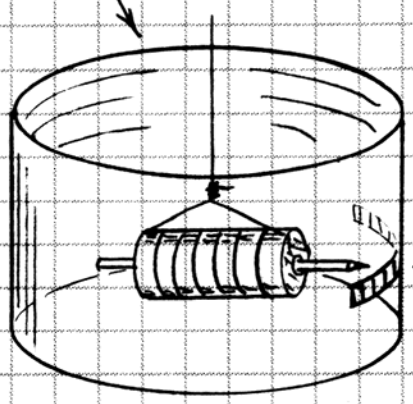

MAGNETOMETER SCALE (1 INDEX MARK PER DEGREE). DIVIDE CIRCUMFERENCE OF CONTAINER BY 360 TO FIND DISTANCE BETWEEN INDEX MARKS. USE LARGER CONTAINER AND LONGER POINTER FOR HIGH RESOLUTION.

HALL SENSOR NORTH COMPASS

A RATIOMETRIC HALL SENSOR CAN DETECT MAGNETIC NORTH. AT MY LOCATION IN CENTRAL TEXAS THE OUTPUT FROM A RATIOMETRIC HALL SENSOR IS A FEW MILLIVOLTS HIGHER WHEN THE SENSOR POINTS NORTH THAN WHEN IT POINTS ELSEWHERE. THIS VOLTAGE IS ENOUGH TO TRIGGER THIS CIRCUIT.

ADJUST R1 UNTIL VOLTAGE AT PIN 6 OF IC1 IS SOMEWHERE BETWEEN LOWEST AND HIGHEST VALUE. GO OUTDOORS AWAY FROM POWER LINES AND LARGE METAL OBJECTS. ROTATE CIRCUIT UNTIL PRINTED FACE OF HALL SENSOR POINTS NORTH. ADJUST R4 UNTIL LED 1 JUST TURNS ON AND LED 2 JUST TURNS OFF. ROTATE CIRCUIT BOARD TOWARD EAST OR WEST AND LED 1 WILL TURN OFF AND LED 2 WILL TURN ON.

TIP: INCREASE SENSITIVITY BY USING A NAIL AS A FLUX CONCENTRATOR (SEE ABOVE).

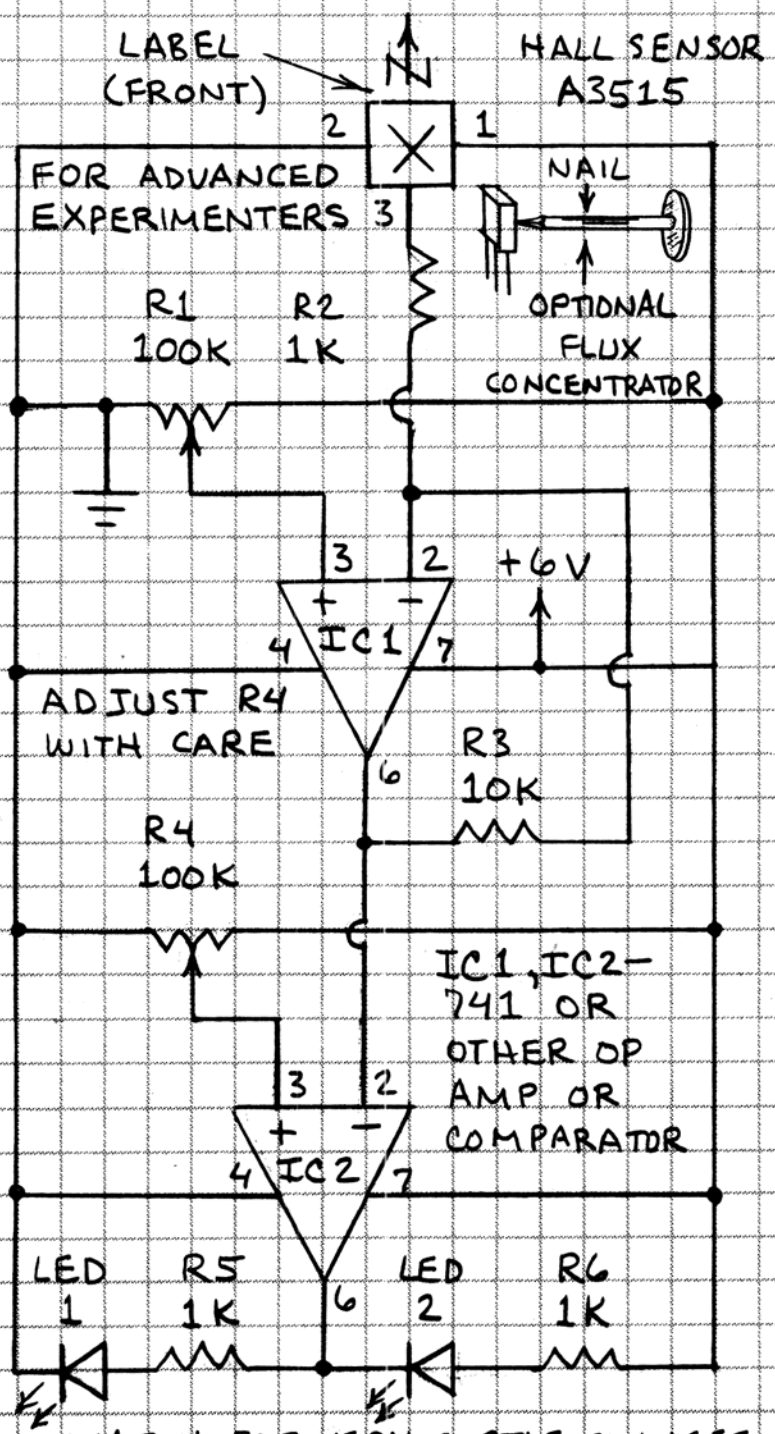

WATCH FOR VERY SUBTLE CHANGES IN BRIGHTNESS OF LEDs.

SPECIALIZED HALL SENSORS

A3422 DIRECTION SENSOR

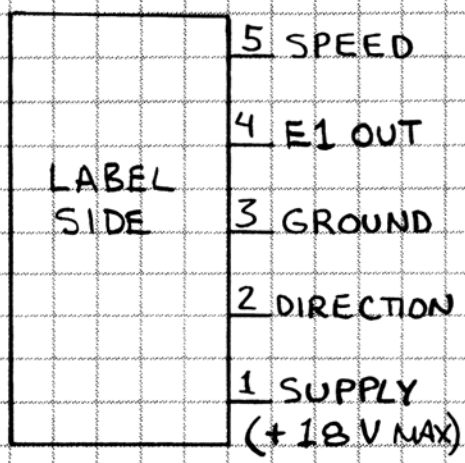

THIS DEVICE HAS TWO SIDE-BY-SIDE HALL SENSORS (E1 AND E2). IT IS DESIGNED TO DETECT ROTATIONAL DIRECTION AND SPEED OF A ROTATING RING MAGNET.

THE A3422 CAN BE USED AS A MAGNET POLE INDICATOR.

E1 IS OUTPUT FROM ONE OF THE TWO HALL SENSORS.

LED 1 = NO MAGNET
LED 2 = SOUTH POLE OF MAGNET

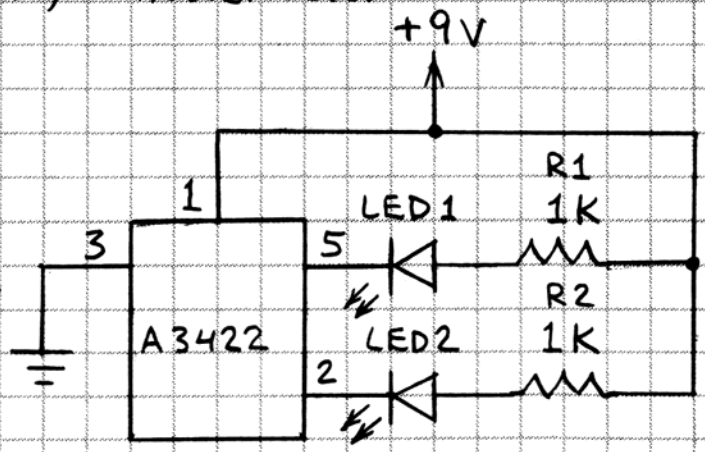

ATS610 GEAR SENSOR

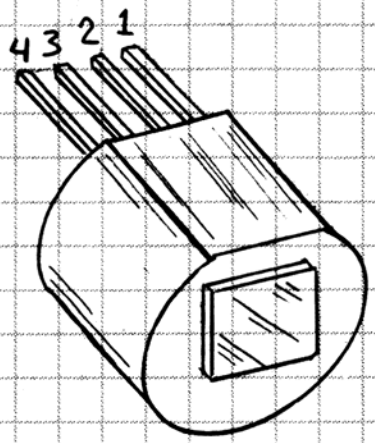

THIS SENSOR INCLUDES A BUILT-IN BIAS MAGNET BEHIND TWO HALL SENSORS. THIS SENSOR IS DESIGNED TO DETECT SMALL TEETH ON A GEAR. IT ALSO WORKS WELL AS A FERROUS METAL DETECTOR.

PIN 1 – SUPPLY (K+16V)
PIN 2 – OUTPUT
PIN 3 – CAPACITOR
PIN 4 – GROUND

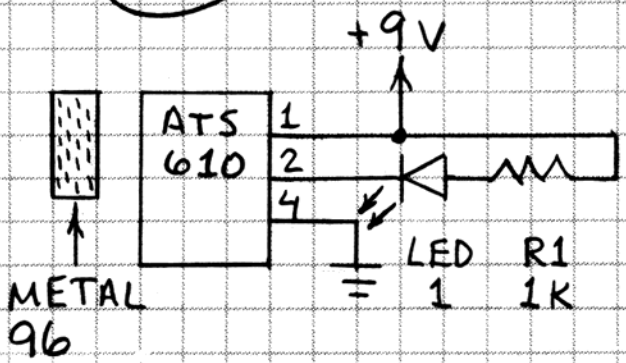

LED 1 STOPS GLOWING WHEN FERROUS METAL IS CLOSE TO SENSOR.

III. SOLAR CELL PROJECTS

OVERVIEW

SOLAR CELLS MADE FROM THIN WAFERS OF SILICON CONVERT LIGHT DIRECTLY INTO ELECTRICITY.

POWER GENERATION IS BY FAR THE MOST IMPORTANT APPLICATION FOR SOLAR CELLS AND ARRAYS. THEREFORE THIS SECTION INCLUDES BASIC INFORMATION ABOUT THE SUN AND SOLAR ENERGY. HOW SOLAR CELLS AND SOLAR CELL ARRAYS ARE USED TO CHARGE STORAGE BATTERIES AND TO DIRECTLY POWER SOME CIRCUITS IS ALSO COVERED.

IT'S IMPORTANT TO KNOW THAT SOLAR CELLS HAVE MANY APPLICATIONS UNRELATED TO SOLAR POWER. THIS IS BECAUSE SOLAR CELLS WORK VERY WELL AS RELATIVELY INEXPENSIVE AND SENSITIVE LIGHT SENSORS. THIS MINI-NOTEBOOK DESCRIBES MANY USES FOR SOLAR CELLS AS LIGHT SENSORS. VARIOUS CIRCUITS THAT USE SOLAR CELLS AS LIGHT SENSORS ARE ALSO GIVEN.

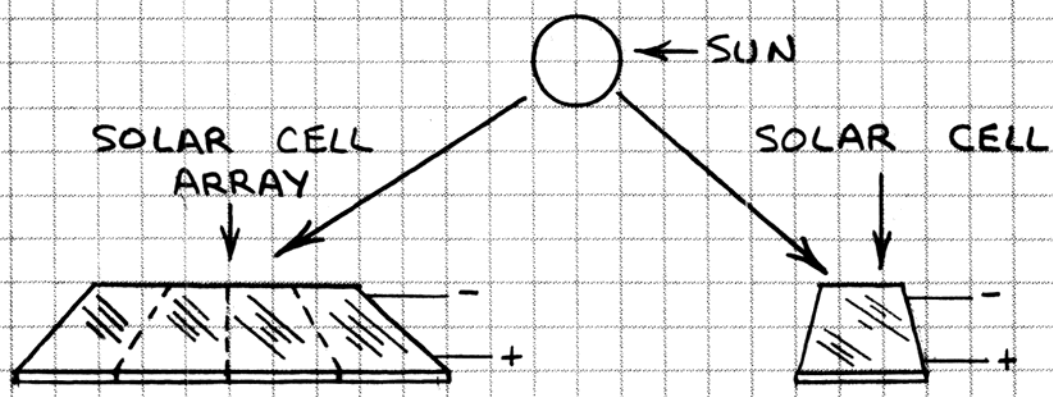

POWER SYSTEMS

1. CHARGE STORAGE BATTERIES.
2. POWER CIRCUITS DIRECTLY.

SENSING SYSTEMS

1. DETECT SUNLIGHT.
2. DETECT LIGHT FROM LEDS, LAMPS AND OTHER SOURCES.

SOLAR ENERGY MILESTONES

FOR THOUSANDS OF YEARS PEOPLE HAVE USED SUNLIGHT TO WARM THEIR HOMES. SOCRATES (470-399 B.C.) TAUGHT THE IMPORTANCE OF PLACING HOMES SO THE SUN'S WARMING RAYS COULD WARM THE INTERIOR ROOMS DURING WINTER.

HERE ARE JUST A FEW HIGHLIGHTS OF HISTORIC SOLAR ENERGY DEVELOPMENTS:

DESTRUCTION OF ROMAN FLEET (212 B.C.) - ARCHIMEDES IS REPORTED TO HAVE IGNITED INVADING ROMAN SHIPS BY MEANS OF REFLECTED SUNLIGHT.

DIAMOND MELTED (1695) - TWO ITALIAN EXPERIMENTERS SUCCEEDED IN MELTING A DIAMOND USING FOCUSED SUNLIGHT.

SOLAR FURNACE (1774) - THE FRENCH CHEMIST ANTOINE-LAURENT LAVOISIER MADE A SOLAR FURNACE THAT MELTED PLATINUM.

SOLAR-POWERED PRINTING PRESS (1878) - A LARGE PARABOLIC REFLECTOR COLLECTED ENOUGH SUNLIGHT TO POWER A PRINTING PRESS.

SOLAR STEAM ENGINE (1901) - A. G. ENEAS DESIGNED A SOLAR STEAM ENGINE THAT PUMPED IRRIGATION WATER IN ARIZONA. SUNLIGHT WAS COLLECTED BY 1,788 MIRRORS INSTALLED IN A FIXTURE THAT RESEMBLED A GIANT UMBRELLA 33.5 FEET (ABOUT 10 METERS) IN DIAMETER.

SOLAR ENGINE (1908) - JOHN BOYLES AND H. E. WILLSIE DEMONSTRATED A 15-HORSE-POWER ENGINE POWERED BY POOLS OF WATER THAT CAPTURED AND STORED THE HEAT FROM SUNLIGHT.

SOLAR ELECTRICAL PLANT (1913) – FRANK SHUMAN AND C.V. BOYS BUILT THE WORLD'S FIRST SOLAR-POWERED ELECTRICAL PLANT NEAR CAIRO, EGYPT. THE HUGE FACILITY USED SEVEN SOLAR COLLECTORS, EACH 204 FEET (ABOUT 62 METERS) LONG. THE COLLECTORS HAD A TOTAL AREA OF 13,000 SQUARE FEET (ABOUT 1,208 SQUARE METERS). THEY AUTOMATICALLY TRACKED THE SUN.

SOLAR OVEN (1925) – C. G. ABBOT OF THE SMITHSONIAN INSTITUTION COOKED MEALS USING A SOLAR-POWERED OVEN AT HIS SUN OBSERVATORY ON MOUNT WILSON, CALIFORNIA.

SOLAR FURNACE (1950'S) – FRENCH SCIENTIST FELIX TROMBE DESIGNED THE WORLD'S LARGEST SOLAR FURNACE. THIS FACILITY, WHOSE 9,000 MIRRORS ARE INSTALLED ON THE SIDE OF A BUILDING, CAN REACH THE TEMPERATURE OF THE SUN'S SURFACE, 10,000° FAHRENHEIT (ABOUT 5,538° CELSIUS).

SILICON SOLAR CELL (1954) – GERALD PEARSON, DARYL CHAPIN AND CALVIN FULLER OF BELL LABORATORIES DEVELOPED THE FIRST SUCCESSFUL SILICON SOLAR CELL. THIS DEVELOPMENT LED TO THE MODERN ERA OF PHOTOVOLTAIC SOLAR POWER CONVERSION.

MID-EAST OIL CRISIS (1970'S) – THE OIL CRISIS OF THE 1970'S STIMULATED SIGNIFICANT NEW RESEARCH IN SOLAR ENERGY. OLD KINDS OF SOLAR ENERGY SYSTEMS WERE IMPROVED AND NEW KINDS WERE DEVELOPED.

THIN-FILM SOLAR CELL (1980'S) – MANY KINDS OF SOLAR CELLS HAVE BEEN DEVELOPED, BUT THIN-FILM CELLS OF SILICON AND OTHER SEMICONDUCTORS ARE AMONG THE MOST IMPORTANT. THEY CAN BE MADE AS FLEXIBLE SHEETS MUCH LARGER THAN STANDARD SILICON SOLAR CELLS.

ENERGY FROM THE SUN

THE SUN EMITS AN INCREDIBLE AMOUNT OF ELECTROMAGNETIC RADIATION. THE TOTAL RADIATED POWER IS 3.83×10^{23} KILOWATTS (KW) OR 383,000,000,000,000,000,000,000 WATTS. MOST OF THIS RADIATION IS LOST TO SPACE. ONLY A TINY FRACTION IS INTERCEPTED BY EARTH AND THE OTHER PLANETS. ACCORDING TO THE SOLAR ENERGY INDUSTRIES ASSOCIATION (SEIA), ALL THE ELECTRICITY CONSUMED IN THE UNITED STATES COULD BE PROVIDED BY PHOTOVOLTAIC SOLAR CELL MODULES COVERING 0.3 % OF THE LAND AREA OF THE U.S.

THE SOLAR CONSTANT

THE MEAN AMOUNT OF SUNLIGHT AT THE TOP OF EARTH'S ATMOSPHERE IS CALLED THE SOLAR CONSTANT. MEASUREMENTS MADE BY SEVERAL SATELLITES SHOW THAT THE SOLAR CONSTANT IS 136.8 WATTS PER SQUARE CENTIMETER.

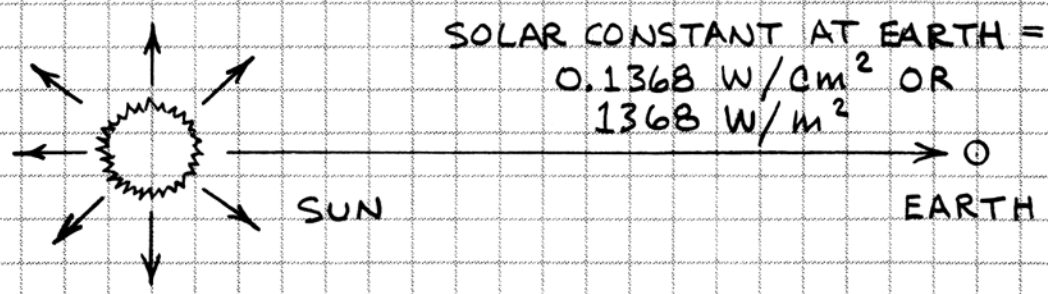

THE SUNLIGHT INTENSITY AT EARTH VARIES BECAUSE EARTH'S ORBIT AROUND THE SUN IS SLIGHTLY ELLIPTICAL. THE MEAN DISTANCE OF EARTH FROM THE SUN IS 92,957,130 MILES (149,600,000 KILOMETERS). IN EARLY JANUARY EARTH IS ABOUT 1,600,000 MILES (2,575,000 KM) CLOSER TO THE SUN. IN EARLY JULY EARTH IS ABOUT 1,600,000 MILES (2,575,000 KM) FARTHER FROM THE SUN. (SEE DRAWING ON FACING PAGE.)

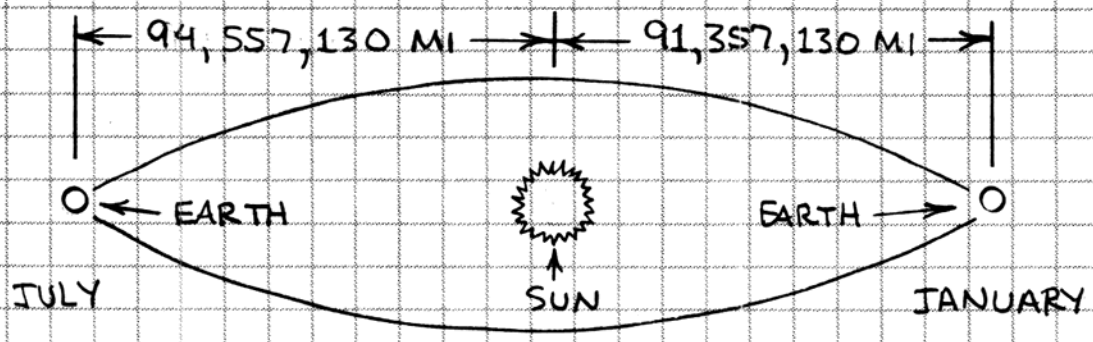

THE DIFFERENCE IN THE INTENSITY OF SUNLIGHT BETWEEN PERIHELION (CLOSEST POINT) AND APHELION (FARTHEST POINT) IS ABOUT 6.7%. USE THE SOLAR CONSTANT TABLE TO FIND THE SOLAR CONSTANT FOR THE FIRST DAY OF ANY MONTH.

SOLAR CONSTANT TABLE

MULTIPLY THE MEAN SOLAR CONSTANT (1,368 WATTS PER SQUARE METER OR 136.8 MILLIWATS PER SQUARE CENTIMETER) BY THE CORRECTION NUMBERS IN THIS TABLE TO FIND THE ACTUAL SOLAR IRRADIANCE ON THE GIVEN DATES.

JANUARY	1.0335	JULY	0.9666
FEBRUARY	1.0288	AUGUST	0.9709
MARCH	1.0173	SEPTEMBER	0.9828
APRIL	1.0009	OCTOBER	0.9995
MAY	0.9841	NOVEMBER	1.0164
JUNE	0.9741	DECEMBER	1.0288

FROM KINSELL L. COULSON, "SOLAR AND TERRESTRIAL RADIATION," ACADEMIC PRESS, 1975.

EXAMPLE: WHAT IS THE SUN'S IRRADIANCE AT THE TOP OF THE ATMOSPHERE ON MAY 1? THE IRRADIANCE ON MAY 1 IS 0.9841 OF THE MEAN SOLAR CONSTANT OF 136.8 MILLIWATTS PER SQUARE CENTIMETER. 0.9841 × 136.8 IS 134.625 MILLIWATTS PER SQUARE CENTIMETER.

SUNLIGHT AND THE ATMOSPHERE

A SOLAR CELL ON A SATELLITE RECEIVES AT LEAST 15% MORE SOLAR ENERGY THAN AN IDENTICAL SOLAR CELL ON EARTH. FOR EXAMPLE, AT NOON ON JULY 1 THE SOLAR IRRADIANCE AT ALBUQUERQUE, NEW MEXICO, IS ABOUT 100 MILLIWATTS PER SQUARE CM ($100\ mW/cm^2$) IF THE SUN IS NOT BLOCKED BY A CLOUD. FROM THE SOLAR CONSTANT TABLE (P. 9) THE IRRADIANCE AT THE TOP OF THE ATMOSPHERE ON JULY 1 IS $0.9666 \times 136.8\ mW/cm^2$ OR $132.2\ mW/cm^2$. THUS ONLY 75.6% OF THE INTENSITY OF THE SUNLIGHT AT THE TOP OF THE ATMOSPHERE REACHES ALBUQUERQUE ON JULY 1. ALBUQUERQUE IS ABOUT 1 MILE (1.6 KILOMETERS) ABOVE SEA LEVEL AND THE AIR IS OFTEN DRY. LESS SUNLIGHT REACHES REGIONS NEARER SEA LEVEL, ESPECIALLY WHEN THE AIR IS MOIST. MUCH LESS SUNLIGHT IS RECEIVED EVERYWHERE DURING WINTER AND WHEN CLOUDS BLOCK THE SKY.

HERE ARE SOME OF THE CHIEF FACTORS THAT AFFECT SUNLIGHT:

1. WATER VAPOR, OZONE AND OTHER GASES IN THE ATMOSPHERE ABSORB SUNLIGHT.

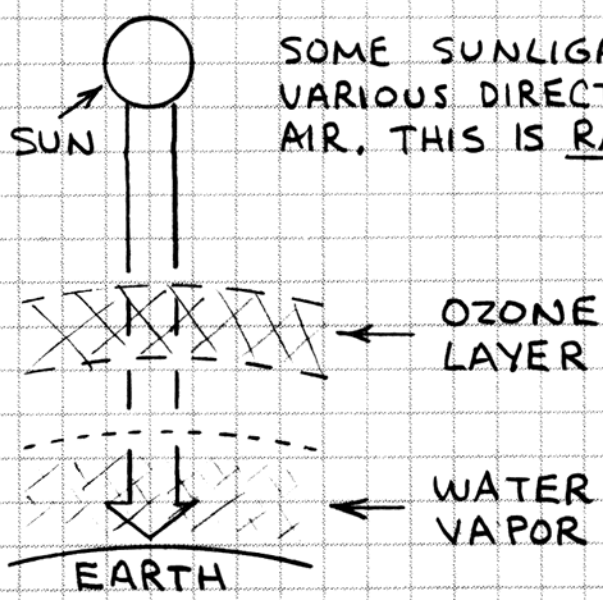

SOME SUNLIGHT IS SCATTERED IN VARIOUS DIRECTIONS BY MOLECULES OF AIR. THIS IS <u>RAYLEIGH</u> <u>SCATTERING</u>.

OZONE ABSORBS ULTRAVIOLET AND ORANGE LIGHT AND VARIOUS INFRARED WAVELENGTHS

WATER VAPOR ABSORBS VARIOUS INFRARED WAVELENGTHS

2. AEROSOLS ARE TINY PARTICLES AND DROPLETS IN THE ATMOSPHERE THAT CAN ABSORB CONSIDERABLE SUNLIGHT OR SCATTER IT BACK INTO SPACE.

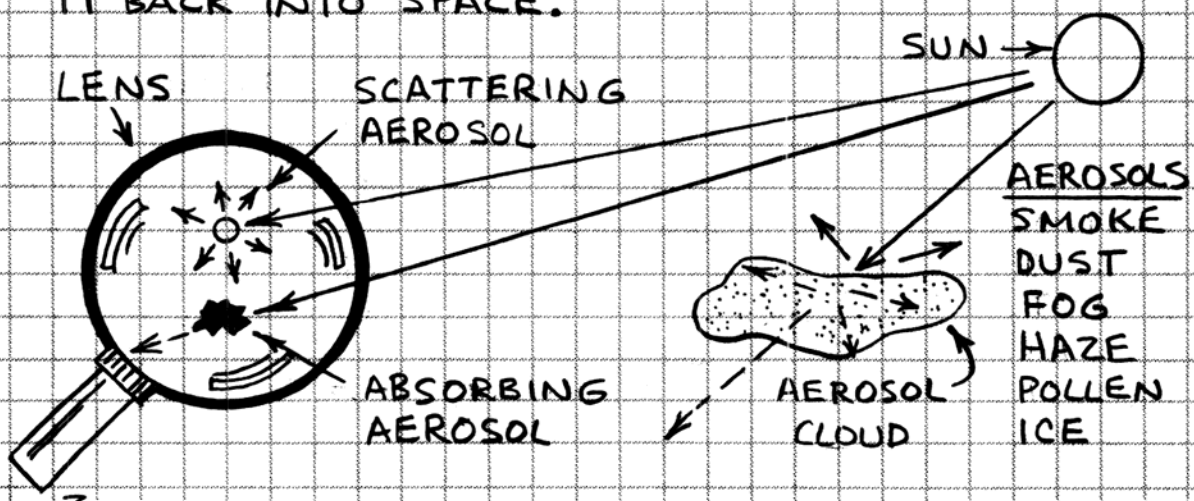

3. CLOUDS ARE FORMED FROM ENORMOUS NUMBERS OF TINY WATER DROPLETS OR ICE CRYSTALS. CLOUDS ABSORB AND SCATTER LIGHT.

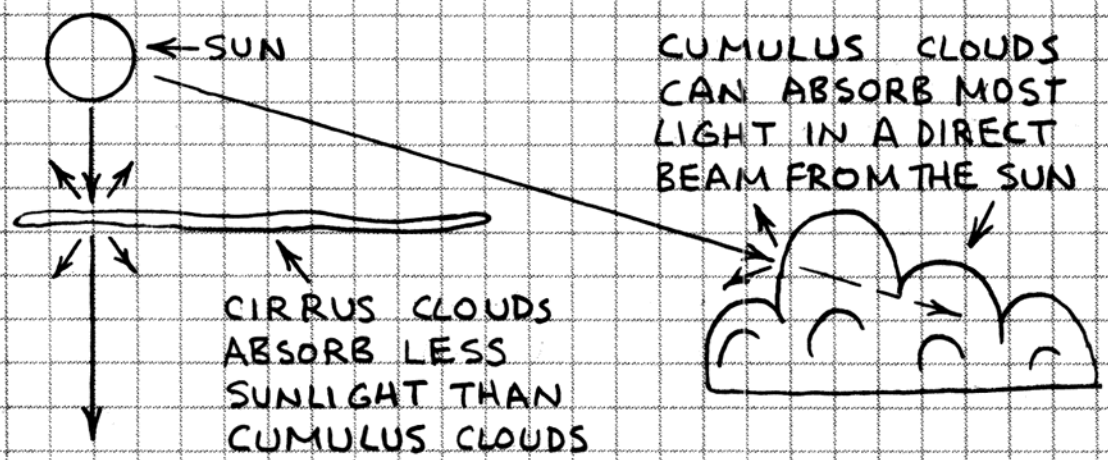

4. THE TILT OF THE EARTH CAUSES SUNLIGHT TO PASS THROUGH MORE ATMOSPHERE DURING FALL, WINTER AND SPRING.

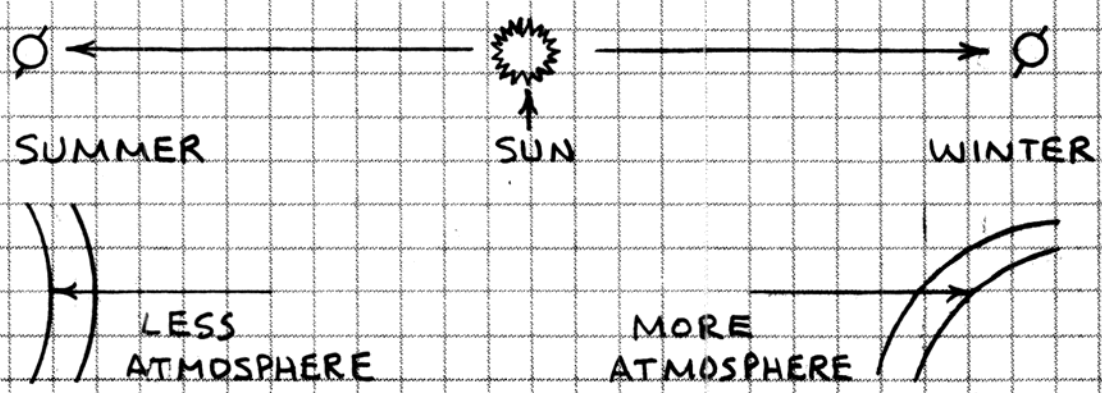

SOLAR CELLS

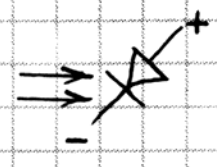

MANY SEMICONDUCTORS WILL GENERATE ELECTRICITY FROM SUNLIGHT. THE MOST COMMON AND BEST DEVELOPED SOLAR CELLS ARE MADE FROM SILICON. SINCE SILICON FORMS 27.7% OF EARTH'S CRUST, SILICON SOLAR CELLS ARE POTENTIALLY INEXPENSIVE. BUT TRANSFORMING SILICON INTO SOLAR CELLS IS AN EXPENSIVE PROCESS THAT REQUIRES CONSIDERABLE ELECTRICITY.

HOW SOLAR CELLS WORK

LIGHT CONSISTS OF PACKETS OF ENERGY CALLED PHOTONS THAT TRAVEL IN A WAVE-LIKE FASHION. WHEN PHOTONS STRIKE SILICON ATOMS THEY DISLODGE ELECTRONS. THE MISSING ELECTRONS LEAVE BEHIND POSITIVELY CHARGED ATOMS. THESE ATOMS ATTRACT FREE ELECTRONS IN THE SILICON. THIS RANDOM MOVEMENT OF ELECTRONS CAN BE CONVERTED INTO A FLOW OF ELECTRONS IF A PN JUNCTION IS FORMED IN THE SILICON. ELECTRONS DISLODGED BY PHOTONS NEAR THE PN JUNCTION ARE ATTRACTED TO THE P SIDE OF THE JUNCTION. THE RESULT IS A FLOW OF ELECTRICAL CURRENT WHEN LIGHT IS PRESENT. THE LEVEL OF CURRENT IN AMPERES IS DIRECTLY PROPORTIONAL TO THE LIGHT INTENSITY. THE POTENTIAL OF THE CURRENT IN VOLTS IS UNRELATED TO THE LIGHT INTENSITY. A TYPICAL SILICON SOLAR CELL GENERATES 0.45 TO 0.55 VOLT IN DIRECT SUNLIGHT.

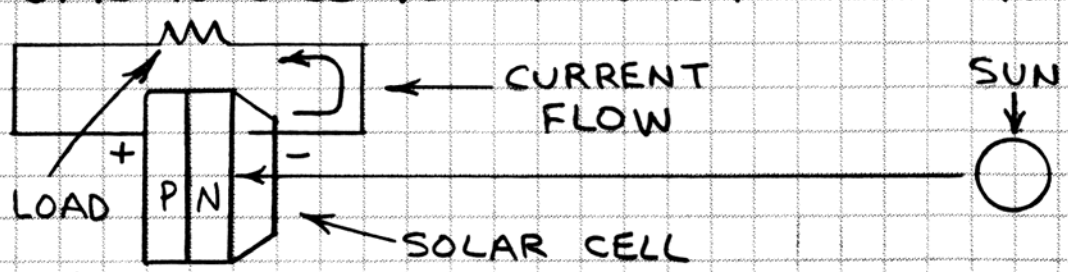

SOLAR CELL EFFICIENCY

IF EVERY PHOTON STRIKING A SOLAR CELL DISLODGES AN ELECTRON, THE CELL WILL TRANSFORM NEARLY 100% OF THE LIGHT THAT STRIKES IT INTO ELECTRICITY. THE ACTUAL EFFICIENCY OF REAL SOLAR CELLS IS FROM ABOUT 5% TO 20%. THERE ARE SEVERAL REASONS FOR REDUCED EFFICIENCY:

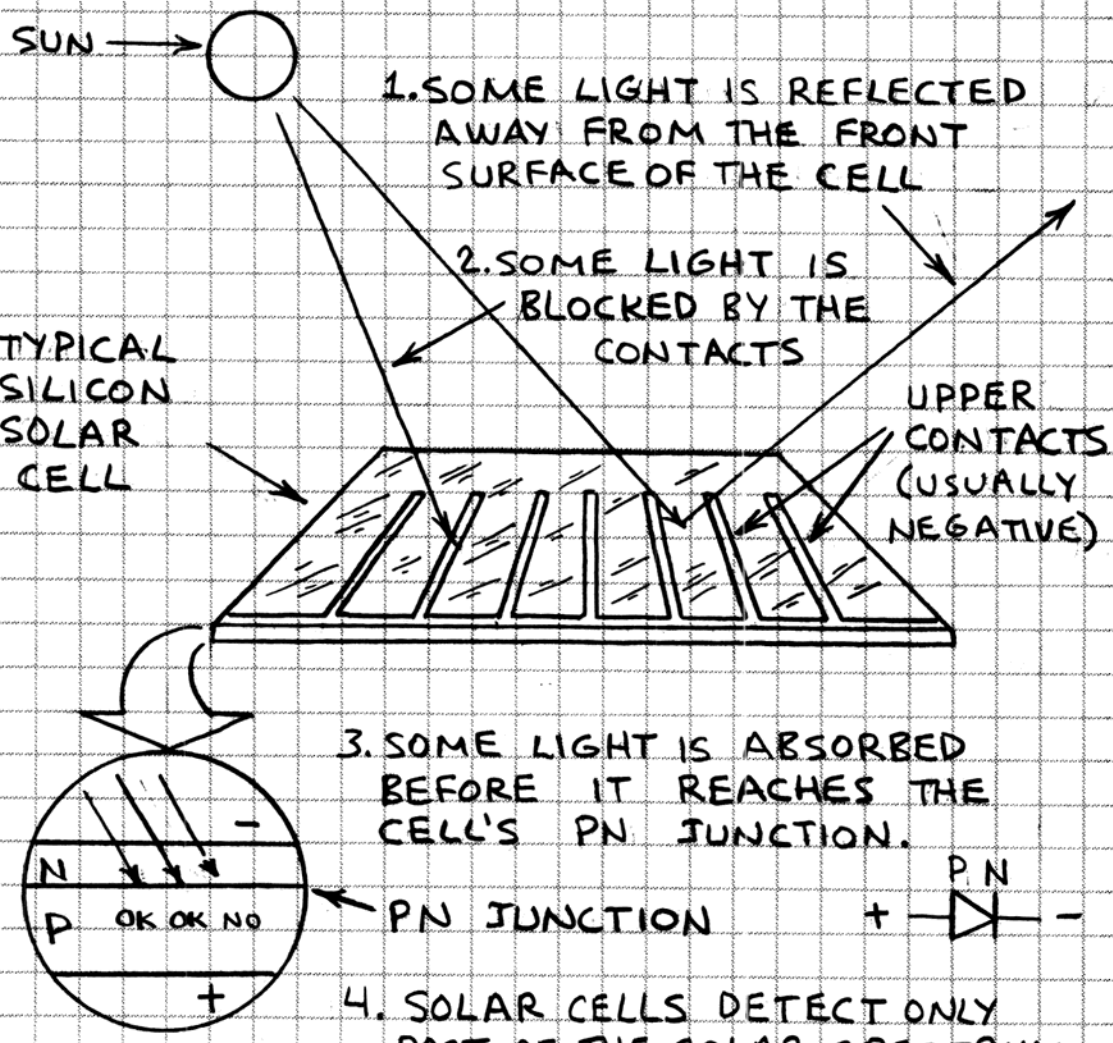

4. SOLAR CELLS DETECT ONLY PART OF THE SOLAR SPECTRUM.

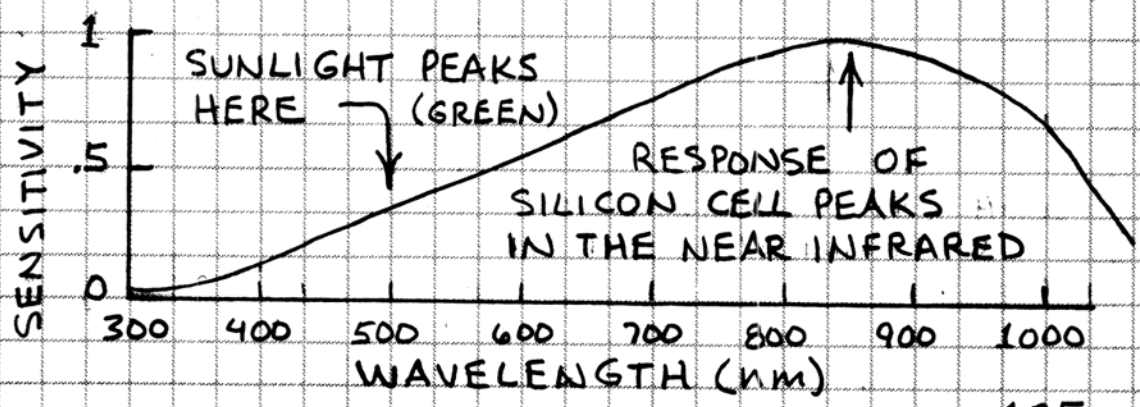

SILICON SOLAR CELL RATINGS

IT IS IMPORTANT TO READ AND UNDERSTAND SOLAR CELL RATINGS, ESPECIALLY WHEN THE CELLS ARE TO BE USED TO CHARGE A STORAGE CELL OR BATTERY.

SILICON SOLAR CELL VOLTAGE

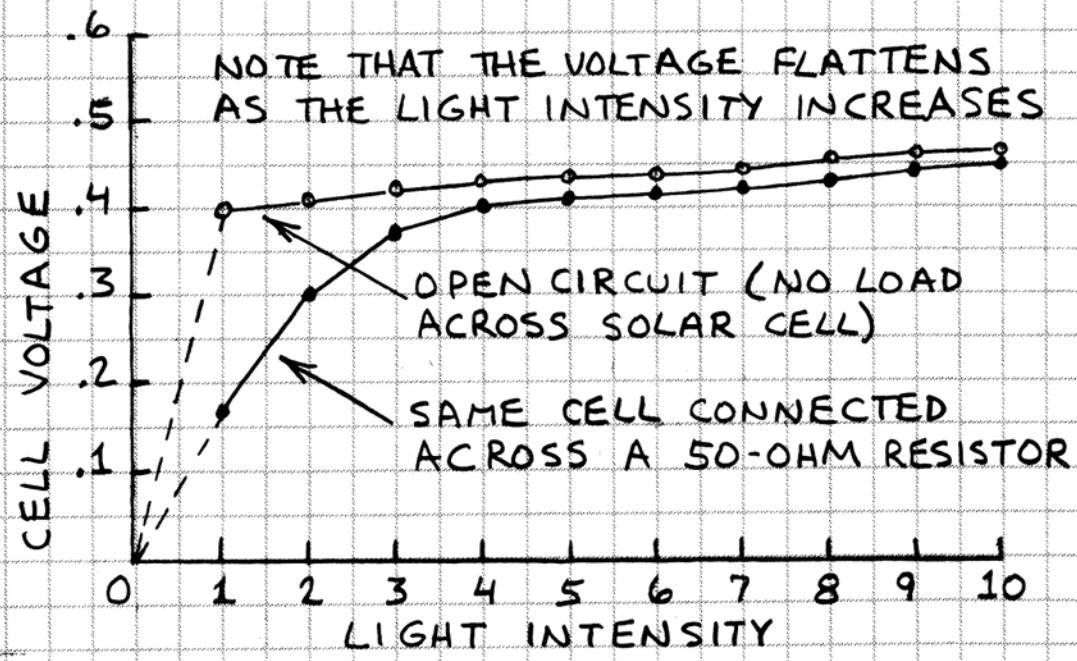

INCREASING SOLAR CELL VOLTAGE

WHEN SOLAR CELLS ARE USED TO CHARGE STORAGE CELLS OR BATTERIES, SEVERAL CELLS MUST BE CONNECTED IN SERIES TO OBTAIN A SUFFICIENTLY HIGH VOLTAGE.

0.5V + 0.5V + 0.5V + 0.5V + 0.5V = 2.5V

TYPICAL SERIES ARRAY:

A STRING OF SOLAR CELLS CONNECTED IN SERIES OR IN PARALLEL (SEE BELOW) IS CALLED AN ARRAY. ALL THE CELLS IN AN ARRAY SHOULD BE EQUALLY ILLUMINATED. SHADING ONE CELL IN A 6.5-VOLT ARRAY DROPPED THE OUTPUT TO 6.2 VOLTS.

SILICON SOLAR CELL CURRENT

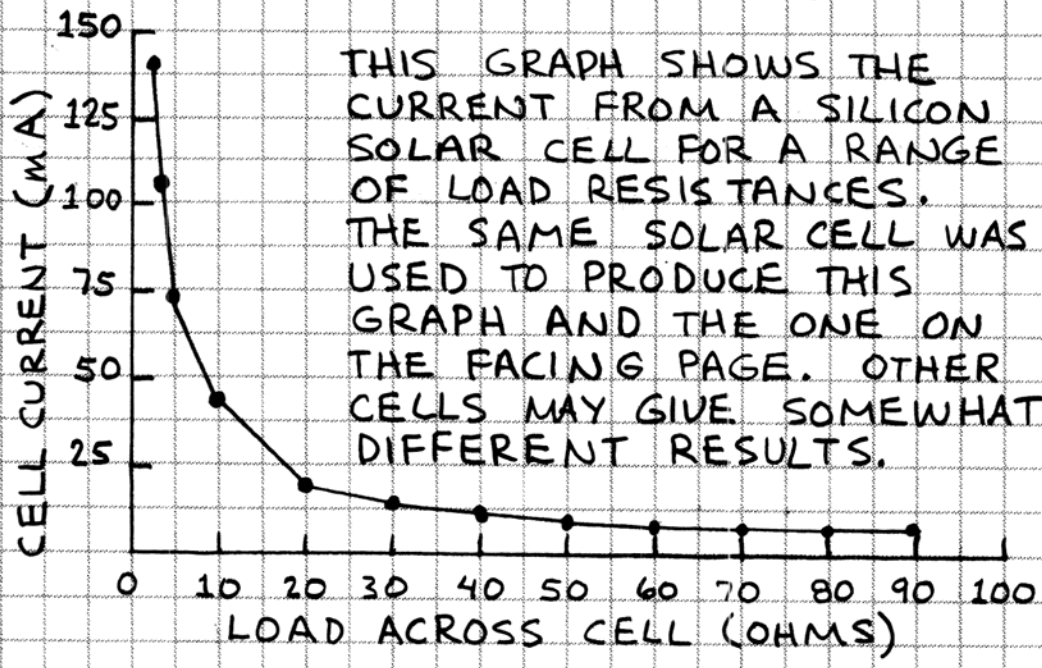

THIS GRAPH SHOWS THE CURRENT FROM A SILICON SOLAR CELL FOR A RANGE OF LOAD RESISTANCES. THE SAME SOLAR CELL WAS USED TO PRODUCE THIS GRAPH AND THE ONE ON THE FACING PAGE. OTHER CELLS MAY GIVE SOMEWHAT DIFFERENT RESULTS.

INCREASING SOLAR CELL CURRENT

CONNECTING SOLAR CELLS IN PARALLEL INCREASES THE OUTPUT CURRENT. THIS IS ESPECIALLY USEFUL WHEN CHARGING LARGE STORAGE BATTERIES.

50mA + 50mA + 50mA + 50mA + 50mA = 250mA

TYPICAL PARALLEL ARRAY:

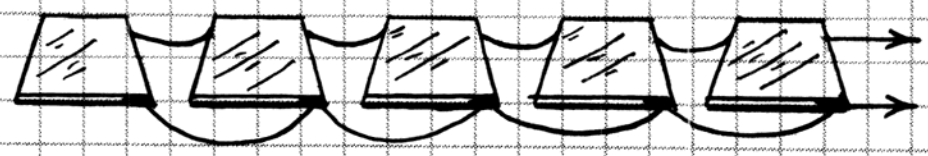

SOLDERING LEADS TO SOLAR CELLS

SOLAR CELLS OR SOLD WITH OR WITHOUT LEADS. SOLDERING LEADS TO SOLAR CELLS IS TRICKY, BUT YOU CAN SAVE MONEY IF YOU ARE WILLING TO SOLDER THE LEADS YOURSELF USING THE REFLOW SOLDERING METHOD DESCRIBED HERE. SOLAR CELLS ARE FRAGILE, SO USE CARE.

SUITABLE SOLDERING IRONS AND SOLDER ARE AVAILABLE FROM RADIOSHACK. SELECT A LOW-WATTAGE IRON OF ABOUT 15 TO 30 WATTS. USE 0.032-INCH OR SMALLER ROSIN CORE SOLDER. DO NOT USE ACID-CORE SOLDER.

BE SURE TO TIN THE TIP OF THE SOLDERING IRON. FIRST, ALLOW THE IRON TO BECOME HOT ENOUGH TO MELT SOLDER. THEN MELT SOLDER OVER THE TIP OF THE SOLDERING IRON. CAREFULLY BRUSH OFF THE EXCESS SOLDER WITH A SOFT CLOTH. AVOID SPLASHING SOLDER ON YOURSELF OR OTHERS. A PROPERLY TINNED TIP WILL APPEAR SMOOTH AND SHINY.

FOLLOW THESE STEPS TO SOLDER LEADS TO A SOLAR CELL:

1. FIND A SAFE PLACE TO WORK. IT IS ESPECIALLY IMPORTANT THAT THE SOLDERING IRON'S POWER CORD BE SAFELY PLACED. SO BE SURE AN ELECTRICAL OUTLET IS NEARBY. CAUTION: A HOT SOLDERING IRON CAN BURN SKIN OR CLOTHING!

2. SILICON SOLAR CELLS HAVE ELECTRODES ON BOTH SIDES. THE ELECTRODE ON THE LIGHT-SENSITIVE, UPPER SURFACE IS A THIN STRIP OF METAL ALONG ONE EDGE OF THE CELL. PLACE THE CELL WITH THE TOP SIDE UP ON YOUR WORK SURFACE (A PIECE OF SCRAP WOOD IS BEST) AND USE A PIECE OF MASKING TAPE TO HOLD IT IN PLACE WHILE YOU SOLDER.

3. WHEN THE SOLDERING IRON IS HOT, GENTLY TOUCH THE EDGE OF THE TIP TO ONE END OF THE UPPER ELECTRODE. LIKE THIS:

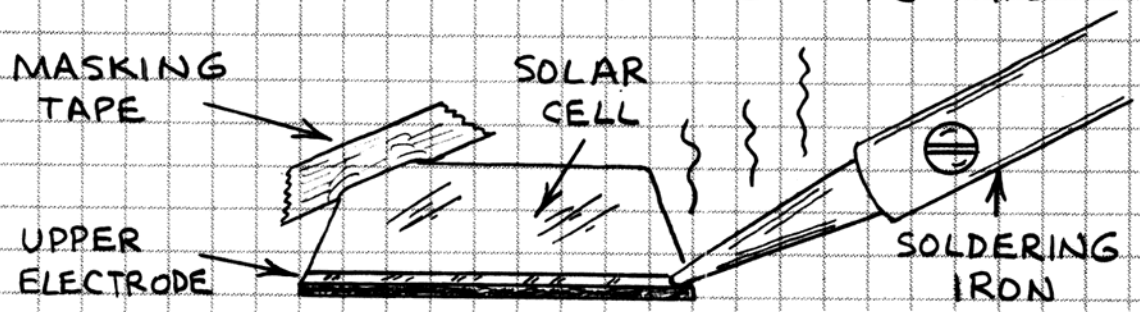

4. AFTER A SECOND OR SO, TOUCH THE END OF A LENGTH OF SOLDER TO WHERE THE SOLDERING IRON TOUCHES THE ELECTRODE. ALLOW SOME SOLDER TO MELT ONTO THE ELECTRODE AND REMOVE THE IRON.

5. REMOVE ABOUT 0.2 INCH (5 mm) OF THE INSULATION FROM THE END OF SOME WRAPPING WIRE. PLACE THE EXPOSED END OF THE WIRE ALONG THE TOP OF THE SOLDER THAT YOU MELTED ONTO THE ELECTRODE AND THEN GENTLY PRESS THE SOLDERING IRON AGAINST THE WIRE AND REMELT THE SOLDER. WHEN THE WIRE PUSHES INTO THE MOLTEN SOLDER, HOLD THE WIRE VERY STILL AND REMOVE THE SOLDERING IRON.

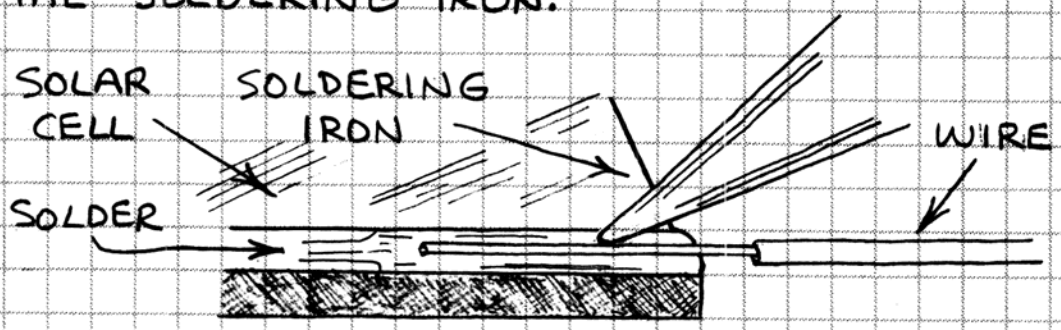

6. AFTER THE SOLAR CELL COOLS, GENTLY REMOVE THE TAPE, FLIP THE CELL OVER AND TAPE IT IN PLACE AGAIN. FOLLOW STEPS 3-5 ABOVE TO SOLDER A LENGTH OF WRAPPING WIRE TO THE BACK ELECTRODE. AFTER THE WIRE SINKS INTO THE MOLTEN SOLDER, BE SURE TO KEEP THE WIRE VERY STILL WHILE THE SOLDER COOLS.

MOUNTING SOLAR CELLS

SOLAR CELLS ARE AVAILABLE UNMOUNTED OR INSTALLED IN VARIOUS KINDS OF PROTECTIVE ENCLOSURES. IT'S BEST TO INSTALL UNMOUNTED CELLS IN AN ENCLOSURE OR TO MOUNT THEM ON A PROTECTIVE PANEL. TWO METHODS THAT I HAVE USED ARE DESCRIBED HERE.

ADVANTAGES OF MOUNTED CELLS

1. SOLAR CELLS ARE BRITTLE AND EASILY BROKEN. MOUNTING THEM GREATLY REDUCES THE RISK OF BREAKAGE.

2. WIRE LEADS SOLDERED TO A SOLAR CELL ARE EASILY PULLED AWAY. MOUNTING THE CELL WILL PROTECT THE LEADS.

3. AN ENCLOSURE OR PANEL CAN BE MOUNTED ON THE CIRCUIT IT IS DESIGNED TO POWER.

4. AN ENCLOSURE OR PANEL PROTECTS THE SOLAR CELL(S) FROM MOISTURE AND DUST.

INSTALLING CELLS IN AN ENCLOSURE

ONE OR MORE SOLAR CELLS CAN BE EASILY INSTALLED IN A TRANSPARENT BOX.

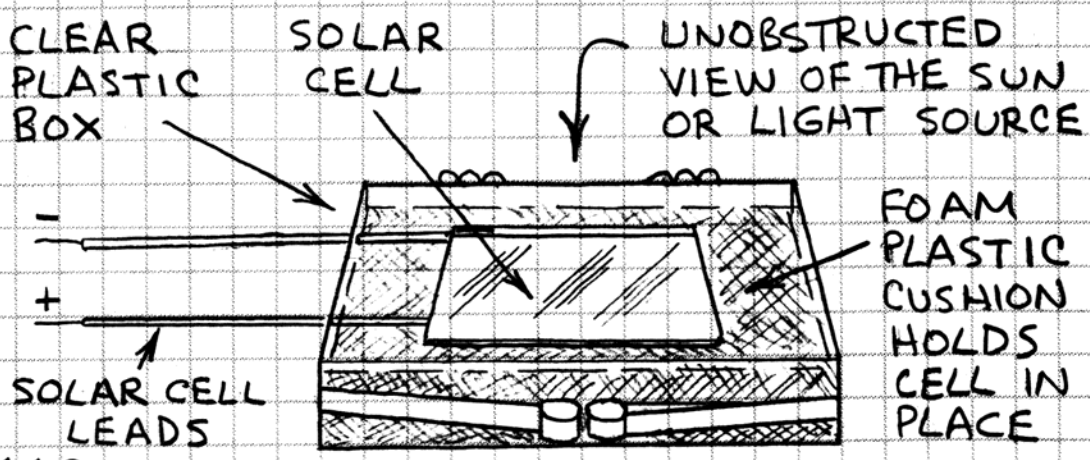

THE DRAWING ON THE FACING PAGE SHOWS A SOLAR CELL SANDWICHED BETWEEN A FOAM PLASTIC CUSHION AND THE LID OF A CLEAR PLASTIC BOX. YOU CAN ALSO SANDWICH THE CELL(S) BETWEEN THE LID AND A PLASTIC OR CARDBOARD LINER INSERTED IN THE LID AND CEMENTED IN PLACE.

I HAVE USED INDIVIDUAL RADIOSHACK SOLAR CELLS INSTALLED IN PLASTIC BOXES AS LIGHT SENSORS WITHOUT EVER DAMAGING A CELL OR BREAKING ITS LEADS. SERIES OR PARALLEL ARRAYS OF CELLS CAN BE INSTALLED IN LARGER PLASTIC BOXES. SOLDER THE CELLS TO ONE ANOTHER WITH SHORT LENGTHS OF WRAPPING WIRE. SECURE THE CELLS IN PLACE AS SHOWN ON THE FACING PAGE OR USE A LINER AS DESCRIBED ABOVE. BE SURE THE CONNECTION WIRES DO NOT BLOCK ANY OF THE CELLS.

MOUNTING SOLAR CELLS ON A PANEL

FOR MANY YEARS I HAVE USED HOMEMADE SOLAR CELL PANELS TO CHARGE FLASHLIGHT CELLS ON BICYCLE TRIPS. HERE'S HOW THEY ARE MADE:

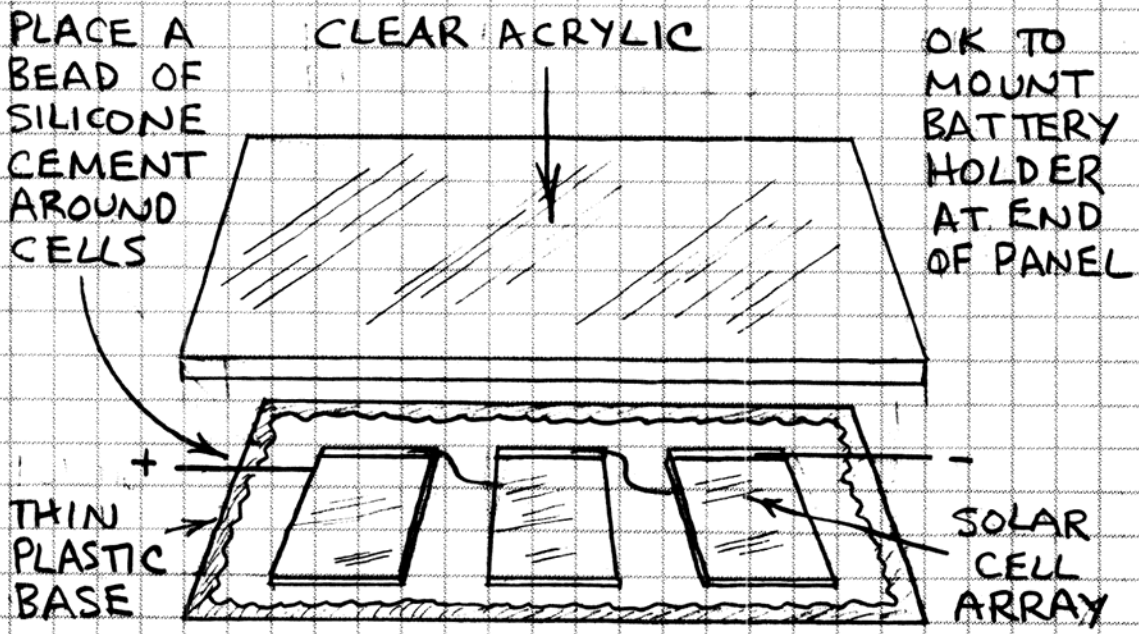

SOLAR CELL BATTERY CHARGERS

LEAD-ACID AND NICKEL CADMIUM (NiCd) ARE THE MOST COMMON STORAGE BATTERIES. CERTAIN ALKALINE, LITHIUM AND OTHER TYPES CAN ALSO BE USED AS RECHARGEABLE STORAGE BATTERIES. WHEN CHARGING A STORAGE BATTERY YOU MUST OBSERVE SEVERAL PRECAUTIONS TO AVOID DAMAGE TO THE BATTERY OR ONE OF ITS CELLS. THESE PRECAUTIONS WILL ALSO GREATLY REDUCE THE POSSIBILITY OF FIRE OR EVEN EXPLOSION, WHICH CAN OCCUR WHEN A STORAGE BATTERY IS IMPROPERLY CHARGED.

STORAGE BATTERY PRECAUTIONS

1. CHARGE ONLY CELLS AND BATTERIES DESIGNED TO BE RECHARGED. CAUTION: NEVER ATTEMPT TO CHARGE OTHER KINDS OF BATTERIES! THEY MAY OVERHEAT, SWELL AND POSSIBLY EXPLODE.

2. NEVER EXCEED THE MAXIMUM ALLOWED CHARGING CURRENT FOR A STORAGE CELL OR BATTERY. INSTEAD OF REDUCING THE CHARGING TIME, THE CELL OR THE BATTERY MAY BE RUINED.

3. CHARGE MULTIPLE STORAGE CELLS IN SERIES INSTEAD OF IN PARALLEL.

CELLS IN SERIES:

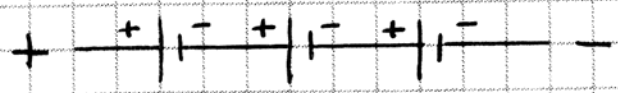

4. KEEP BATTERIES AWAY FROM DIRECT SUNLIGHT WHILE BEING CHARGED.

5. IF A BATTERY BECOMES HOT WHILE BEING CHARGED, IMMEDIATELY DISCONNECT IT OR REMOVE IT FROM THE SOLAR CHARGER. ALLOW IT TO COOL BEFORE USING IT.

6. NEVER SHORT THE TERMINALS OF A STORAGE CELL OR BATTERY! STORAGE CELLS HAVE A VERY LOW INTERNAL RESISTANCE. THIS MEANS THEY CAN PRODUCE A VERY HIGH CURRENT IF THEIR TERMINALS ARE SHORTED.

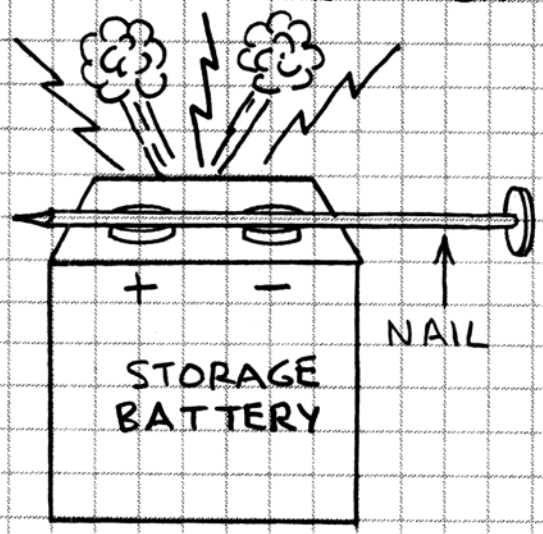

CAUTION!

DO NOT SHORT THE TERMINALS OF A STORAGE CELL OR BATTERY WITH A NAIL, COIN, METAL FOIL OR OTHER CONDUCTOR.

7. USE TAPE TO INSULATE THE EXPOSED TERMINALS OF STORAGE CELLS AND BATTERIES. OTHERWISE THE TERMINALS MIGHT BECOME ACCIDENTALLY SHORTED TOGETHER. WHEN POSSIBLE, USE AN INSULATED BATTERY HOLDER OR CONNECTION CLIPS WITH INSULATED LEADS.

8. IT'S BEST TO CHARGE NICKEL CADMIUM STORAGE CELLS AND BATTERIES WHEN THEY ARE FULLY DISCHARGED. THIS INCREASES THE TIME THESE CELLS WILL FUNCTION BETWEEN CHARGES.

9. NEVER GUESS ABOUT THE SPECIFICATIONS OF AN UNKNOWN OR UNMARKED BATTERY. THE SPECIFICATIONS OF BATTERIES SOLD BY RADIOSHACK ARE LISTED IN THE RADIOSHACK CATALOG. YOU CAN FIND THE SPECIFICATIONS OF BATTERIES VIA THE WORLD WIDE WEB. BEGIN YOUR SEARCH BY SELECTING ONE OF THE WEB SEARCH ENGINES. TYPE IN THE MANUFACTURER'S NAME AND THE WORD "BATTERY" OR "CELL" TO NARROW YOUR SEARCH.

SOLAR CELL BATTERY CHARGERS

SERIES ARRAYS OF SOLAR CELLS ARE USED TO CHARGE STORAGE CELLS AND BATTERIES. THE ARRAY MUST GENERATE A SLIGHTLY HIGHER VOLTAGE THAN THAT OF THE BATTERY BEING CHARGED. HERE ARE THE NUMBER OF SERIES-CONNECTED CELLS COMMONLY USED TO CHARGE SOME POPULAR BATTERY CONFIGURATIONS:

1 1.2-VOLT NiCd CELL – 4 SOLAR CELLS

2 1.2-VOLT NiCd CELLS IN SERIES – 9 SOLAR CELLS

4 1.2-VOLT NiCd CELLS IN SERIES – 18 SOLAR CELLS

1 12-VOLT LEAD-ACID BATTERY – 36 SOLAR CELLS

SOLAR 2×AA CHARGER

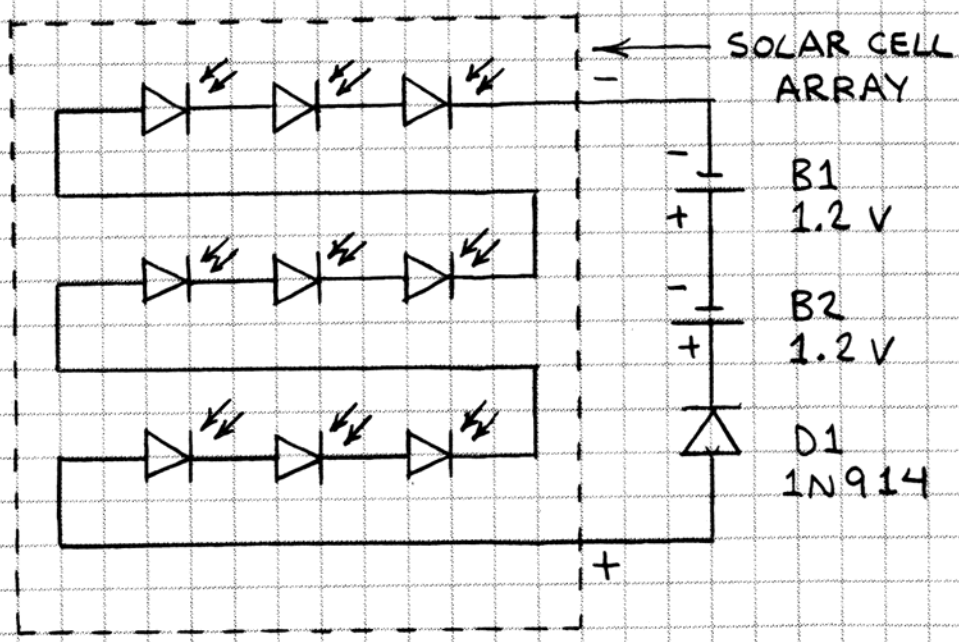

THIS CIRCUIT WILL CHARGE 2 AA NiCd CELLS. IF THE CELLS ARE FULLY DISCHARGED, SOLAR CELLS THAT GENERATE 50 TO 100 mA WILL CHARGE THE CELLS IN ABOUT 5 TO 8 HOURS.

D1 PREVENTS THE NiCd CELLS FROM DISCHARGING THROUGH THE SOLAR CELLS.

SOLAR BATTERY CHARGER TIPS

1. NEVER EXCEED THE RECOMMENDED CHARGE RATE FOR A STORAGE CELL.

2. INCREASED CURRENT REDUCES CHARGING TIME. CHECK THE BATTERY'S SPECIFICATIONS TO FIND THE MAXIMUM ALLOWABLE CURRENT.

3. DO NOT USE A SOLAR ARRAY THAT DELIVERS TOO MUCH CURRENT TO THE CELLS BEING CHARGED.

4. SEVERAL TIMES A DAY REORIENT A SOLAR PANEL SO IT FACES THE SUN.

5. SOLAR CELLS WORK BEST WHEN COOL. AVOID PLACING A SOLAR PANEL ON SURFACES THAT BECOME HOT IN SUNLIGHT, SUCH AS PAVEMENT OR DARK PAINTED METAL.

6. STORAGE BATTERIES CAN BE MOUNTED ON THE BACK SIDE OF A SOLAR PANEL. BUT THEY WORK BEST WHEN KEPT IN A COOLER LOCATION WHILE BEING CHARGED.

MONITORING A SOLAR CHARGER

YOU CAN MEASURE THE CURRENT FROM A SOLAR PANEL WITH A MULTIMETER.

1. CONNECT A MULTIMETER SET TO MEASURE CURRENT BETWEEN THE BLOCKING DIODE AND THE BATTERY BEING CHARGED. BE SURE TO OBSERVE POLARITY, OR...

2. CONNECT A 1-OHM POWER RESISTOR BETWEEN THE BLOCKING DIODE AND THE BATTERY BEING CHARGED. USE A MULTIMETER TO MEASURE THE VOLTAGE (V) ACROSS THE RESISTOR (R). FROM OHM'S LAW, CURRENT EQUALS V/R OR, IN THIS CASE, V.

TAKE A SOLAR CELL INTO SPACE

SOLAR CELLS ARE SENSITIVE TO ONLY PART OF THE SOLAR SPECTRUM. THEREFORE A SOLAR CELL CAN NOT MEASURE THE POWER OF THE TOTAL AMOUNT OF SUNLIGHT AT THE TOP OF THE ATMOSPHERE (THE SOLAR CONSTANT), EVEN IF YOU COULD TAKE ONE THERE.

ACCORDING TO SOLAREX, A MAJOR SOLAR CELL MANUFACTURER, A SOLAR CELL PRODUCES ABOUT +14.6% MORE POWER IN SPACE THAN THE SAME CELL PRODUCES ON EARTH. LET'S CALL THIS PERFORMANCE INCREASE A SOLAR CELL'S SPACE EFFICIENCY.

YOU DON'T NEED TO BECOME AN ASTRONAUT TO DETERMINE HOW MUCH MORE POWER A SOLAR CELL WILL PRODUCE IN SPACE. THE METHOD DESCRIBED HERE WILL REVEAL A SOLAR CELL'S SPACE EFFICIENCY FROM EARTH. FOLLOW THESE STEPS:

1. MOUNT A SOLAR CELL AT THE END OF A PVC OR CARDBOARD TUBE:

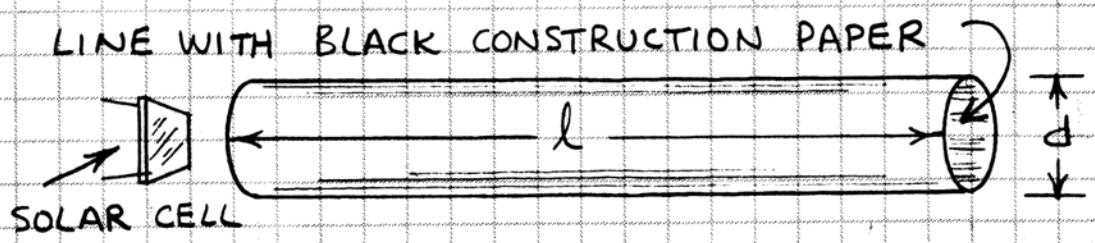

l SHOULD BE AT LEAST 5 TIMES d.

USE DOUBLE SIDED TAPE TO ATTACH A BARE SOLAR CELL TO A THIN CARDBOARD DISK. USE DARK TAPE TO ATTACH THE CELL AND DISK TO THE END OF THE TUBE. ALTERNATIVELY, INSTALL THE SOLAR CELL IN A THIN, CLEAR PLASTIC BOX AND TAPE THE BOX TO THE END OF THE TUBE. IF THE SOLAR CELL IS LARGER THAN d, THE EXPOSED PORTION OF THE CELL MUST BE SHIELDED FROM LIGHT.

ONE WAY IS TO WRAP THE SOLAR CELL END OF THE TUBE WITH ALUMINUM FOIL. TAPE THE FOIL TO THE SIDE OF THE TUBE. BE SURE IT DOES NOT CONNECT TOGETHER OR SHORT THE SOLAR CELL LEADS.

2. CONNECT THE SOLAR CELL LEADS ACROSS A 100-OHM RESISTOR. TAPE THE RESISTOR TO THE SIDE OF THE TUBE AS SHOWN:

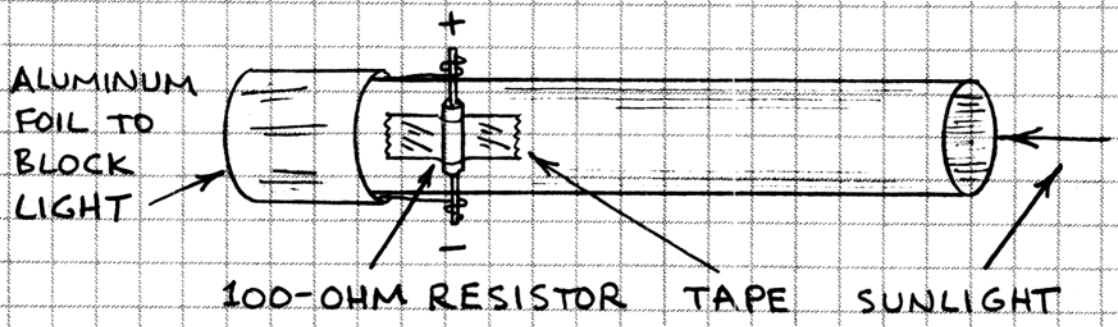

3. ON A CLEAR DAY MEASURE THE VOLTAGE ACROSS THE 100-OHM RESISTOR WHEN THE TUBE IS POINTED DIRECTLY AT THE SUN. THE TUBE IS PROPERLY POINTED WHEN ITS SHADOW DISAPPEARS AND WHEN THE VOLTAGE ACROSS THE 100-OHM RESISTOR REACHES A PEAK.

MAKE MEASUREMENTS FROM EARLY MORNING TO NOON OR FROM NOON TO LATE AFTERNOON. IF YOU DO NOT HAVE INTERNET ACCESS YOU WILL NEED TO MEASURE THE ANGLE OF THE SUN OVER THE HORIZON AT EACH MEASUREMENT. RECORD YOUR DATA IN A NOTEBOOK UNDER THESE HEADINGS:

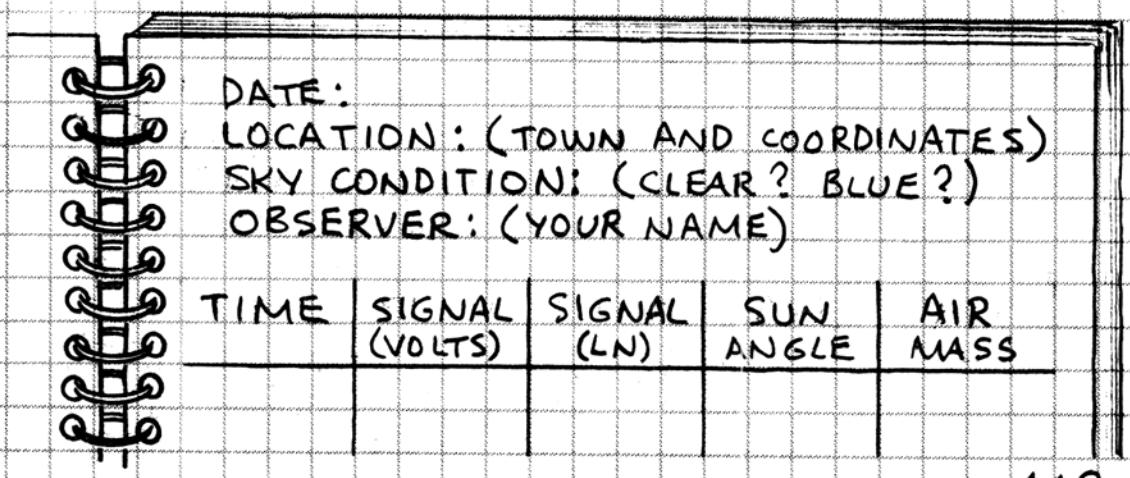

DATE:
LOCATION: (TOWN AND COORDINATES)
SKY CONDITION: (CLEAR? BLUE?)
OBSERVER: (YOUR NAME)

TIME	SIGNAL (VOLTS)	SIGNAL (LN)	SUN ANGLE	AIR MASS

4. AIR MASS (m) IS THE THICKNESS OF THE ATMOSPHERE BETWEEN YOU AND THE SUN. $m = 1/\sin\theta$, WHERE θ IS THE ANGLE OF THE SUN ABOVE THE HORIZON. FIND m FOR EACH TIME YOU MADE A MEASUREMENT. USE THE SUN ANGLES YOU MEASURED. OR VISIT A SEARCH ENGINE ON THE WORLD WIDE WEB AND ENTER "SUN ANGLE CALCULATOR." CHECK THE WEB SITES AND SELECT A CALCULATOR YOU LIKE. FOLLOW THE INSTRUCTIONS TO FIND THE SUN ANGLE FOR EACH TIME. CALCULATE m FOR EACH ANGLE AND ENTER THE RESULTS IN YOUR NOTEBOOK.

5. USE THE LN KEY ON A SCIENTIFIC CALCULATOR TO CONVERT THE SIGNALS YOU MEASURED TO THEIR NATURAL LOGARITHMS. ENTER THE RESULTS IN YOUR NOTEBOOK. HERE ARE SOME OF MY RESULTS:

DATE: FEBRUARY 21, 1999
LOCATION: GERONIMO CREEK, TEXAS
SKY CONDITION: CLEAR AND BLUE
OBSERVER: FORREST M. MIMS III

TIME	SIGNAL (VOLTS)	SIGNAL (LN)	SUN ANGLE	AIR MASS
1550:20	4.60	1.5261	30.09°	1.99
1616:00	4.44	1.4907	25.39°	2.33

6. GRAPH THE LN OF THE SIGNALS AND THEIR AIR MASSES. HERE'S MY GRAPH:

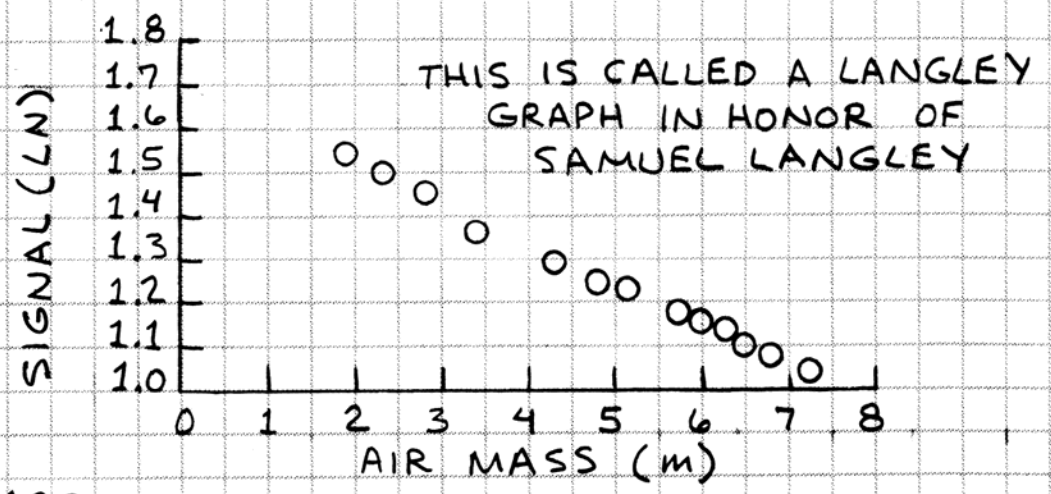

IF THE SKY WAS CLEAR, THE POINTS BETWEEN AN AIR MASS OF ABOUT 2 TO 6 SHOULD FORM A STRAIGHT LINE. DRAW A LINE THROUGH THESE POINTS AND EXTEND IT TO THE Y (VERTICAL) AXIS OF THE GRAPH (AIR MASS = 0). THE LN OF THE SIGNAL THE SOLAR CELL WILL PRODUCE ABOVE THE ATMOSPHERE, THE CELL'S EXTRATERRESTRIAL (ET) CONSTANT, IS WHERE THE LINE CROSSES THE Y AXIS.

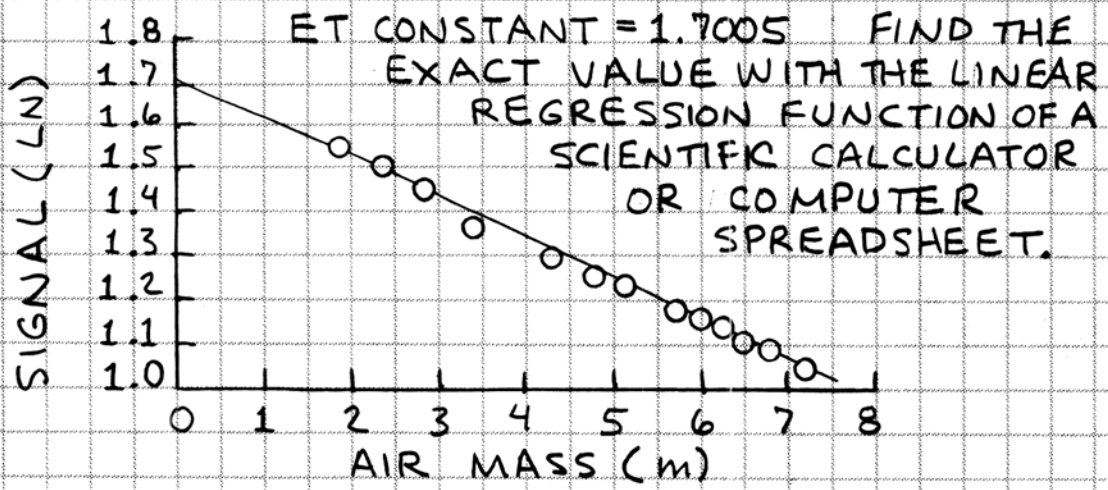

7. USE THE e^x KEY OF YOUR CALCULATOR TO CONVERT THE LN OF THE HIGHEST SIGNAL AT OR NEAR NOON AND THE ET CONSTANT TO THEIR ANTILOGS. DIVIDE THE ET CONSTANT BY THE NOON SIGNAL, SUBTRACT 1 AND ADD A % SIGN. THIS IS THE SOLAR CELL'S SPACE EFFICIENCY, THE INCREASE IN PERFORMANCE THE CELL WILL PROVIDE IN SPACE. THE SOLAR CELL I MEASURED HAS A SPACE EFFICIENCY OF +10.9 %. THIS IS REASONABLY CLOSE TO THE +14.6 % GIVEN BY SOLAREX. SOME OF THE DIFFERENCE IS BECAUSE THE LANGLEY METHOD WORKS BEST WITH A NARROW BAND OF WAVELENGTHS AND A SOLAR CELL DETECTS FROM ABOUT 400 TO 1100 NANOMETERS. DIFFERENCES ARE ALSO CAUSED BY DIFFERING AMOUNTS OF WATER VAPOR AND HAZE WHEN THE TESTS WERE CONDUCTED. WATER VAPOR IS ESPECIALLY IMPORTANT SINCE IT ABSORBS SOME NEAR INFRARED TO WHICH SOLAR CELLS ARE VERY SENSITIVE.

SOLAR POWERED MOTORS

SMALL DC MOTORS CAN BE POWERED BY SOLAR CELLS. SOME MOTORS REQUIRE ONLY A SINGLE CELL AND BRIGHT SUNLIGHT. MOST REQUIRE AN ARRAY OF SOLAR CELLS.

BASIC SOLAR POWERED MOTOR

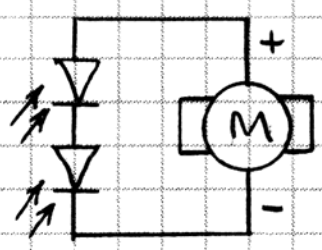

A SINGLE SOLAR CELL GENERATES ENOUGH CURRENT TO POWER MOST SMALL DC MOTORS. ADD CELLS IN SERIES IF MORE VOLTAGE IS REQUIRED.

HIGHER POWER SOLAR MOTOR

A SOLAR CELL ARRAY THAT POWERS A MOTOR ON A BRIGHT SUMMER DAY MAY NOT PROVIDE ADEQUATE POWER DURING WINTER. THIS CIRCUIT FEATURES TWO SERIES ARRAYS CONNECTED IN PARALLEL TO PROVIDE DOUBLE THE CURRENT PRODUCED BY A SINGLE ARRAY. IF IDENTICAL 0.5 VOLT CELLS ARE USED AND IF EACH PRODUCES 50 mA IN BRIGHT SUNLIGHT, THEN THIS ARRAY WILL PROVIDE 6 VOLTS (12 CELLS × 0.5 VOLT) AND 100 mA.

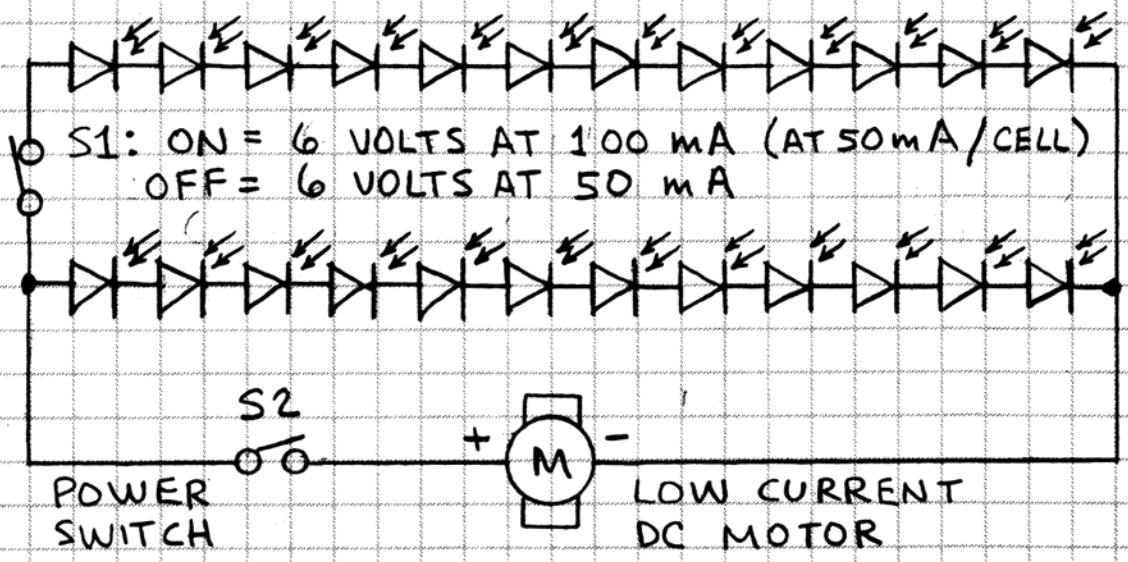

REVERSIBLE SOLAR MOTOR

A REVERSIBLE SOLAR POWERED MOTOR HAS APPLICATIONS IN ROBOTICS AND TRACKING THE SUN. THE ROTATION OF THE MOTOR BELOW IS CONTROLLED BY WHICH OF TWO SOLAR ARRAYS IS ILLUMINATED. WHEN BOTH ARRAYS ARE EQUALLY ILLUMINATED, THE MOTOR DOES NOT ROTATE.

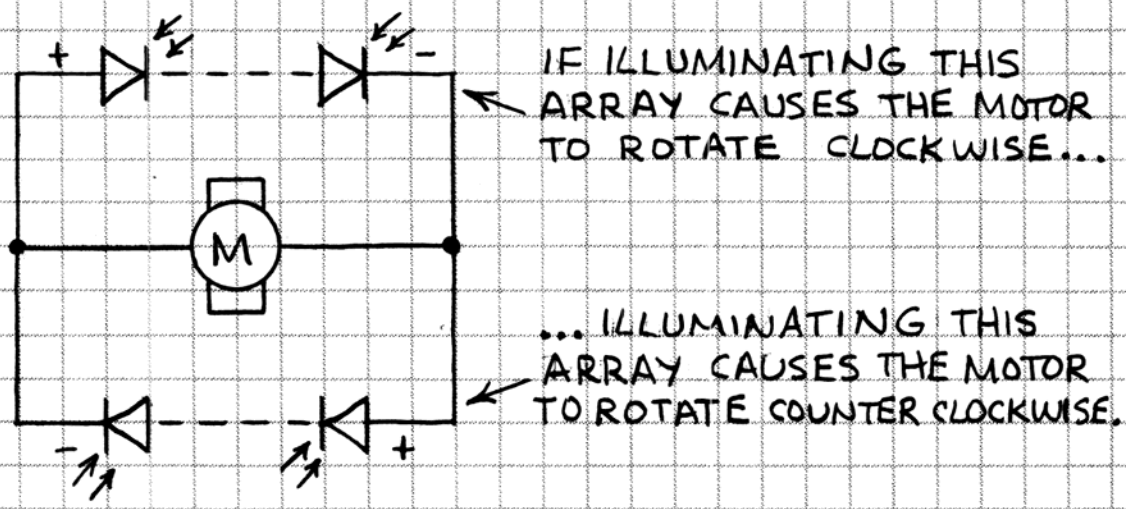

SOLAR MOTOR WITH BATTERY BACKUP

EVEN A BRIEF INTERRUPTION OF DIRECT SUNLIGHT WILL SLOW OR EVEN STOP A SOLAR POWERED MOTOR. A STORAGE BATTERY CONNECTED ACROSS THE MOTOR'S SOLAR CELL ARRAY WILL PROVIDE BACKUP POWER.

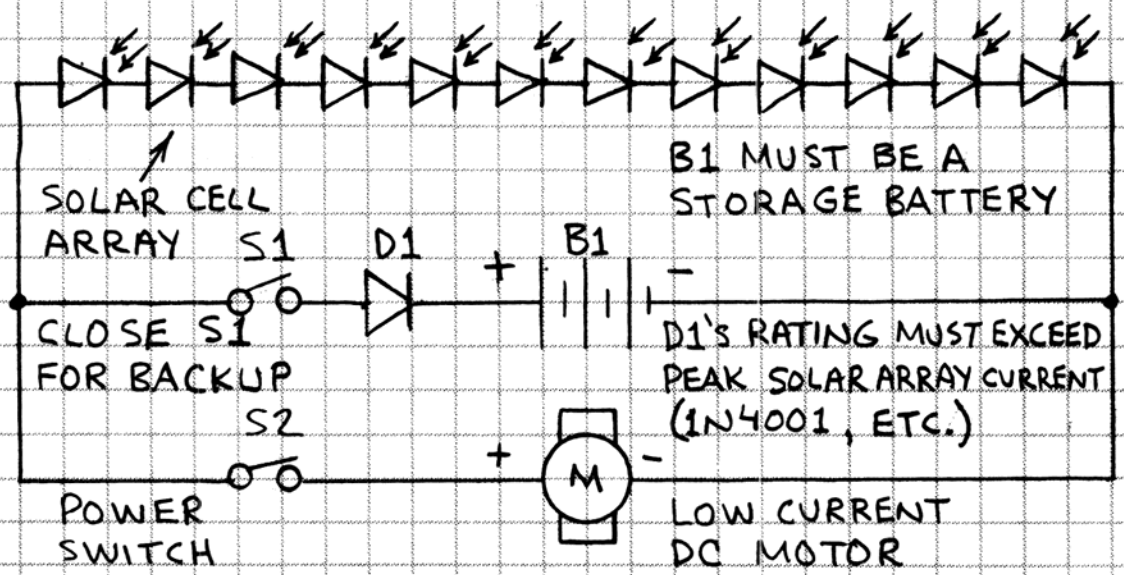

SOLAR ACTUATED MOTORS

SOLAR CELLS HAVE MANY APPLICATIONS IN ROBOTICS AND CONTROL. THE CIRCUITS SHOWN HERE SWITCH SMALL DC MOTORS ON OR OFF WITH SUNLIGHT. SOME ARE SO SENSITIVE THEY CAN BE TRIGGERED WITH A SMALL FLASHLIGHT OR LASER POINTER.

POWER FET ACTUATOR (1)

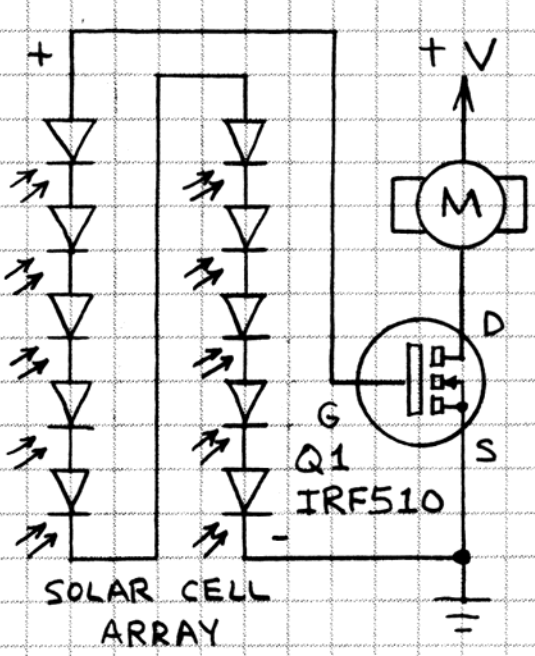

THIS CIRCUIT WILL DRIVE A SMALL DC MOTOR WHEN THE IRF510 POWER MOSFET IS SWITCHED ON WITH ABOUT 4 VOLTS FROM A SOLAR CELL ARRAY. THE IRF510 CAN DRIVE A MOTOR THAT CONSUMES UP TO 2 AMPS. +V SHOULD NOT EXCEED THE MOTOR'S RATING.

TRANSISTOR ACTUATOR

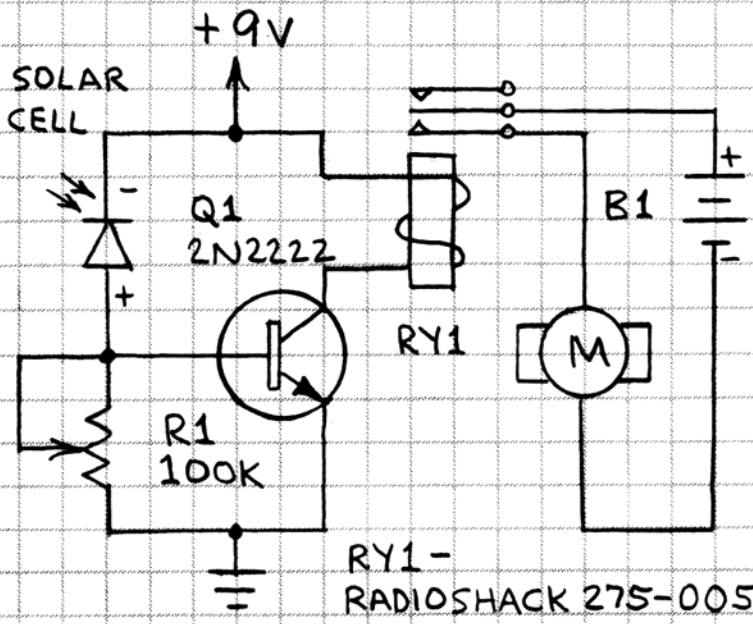

THIS CIRCUIT USES A REVERSE BIASED SOLAR CELL TO SENSE LIGHT. R1 CONTROLS THE SENSITIVITY. USE CIRCUIT TO ACTUATE SMALL DC MOTOR (1 1/2 TO 6 VOLTS).

RY1 - RADIOSHACK 275-005 OR SIMILAR.

POWER FET ACTUATOR (2)

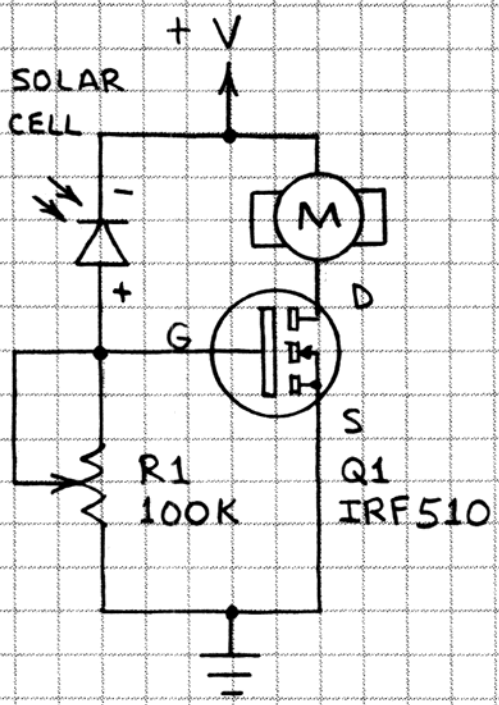

THIS CIRCUIT WILL DRIVE A SMALL DC MOTOR WHEN THE IRF510 POWER MOSFET IS SWITCHED ON BY THE VOLTAGE DIVIDER FORMED BY THE SOLAR CELL AND R1. ADJUST R1 TO CONTROL SENSITIVITY. THE IRF510 WILL DRIVE A MOTOR THAT CONSUMES UP TO 2 AMPERES. +V SHOULD NOT EXCEED THE MOTOR'S RATING. USE SUNLIGHT, FLASHLIGHT OR LASER POINTER.

OP AMP - POWER FET ACTUATOR

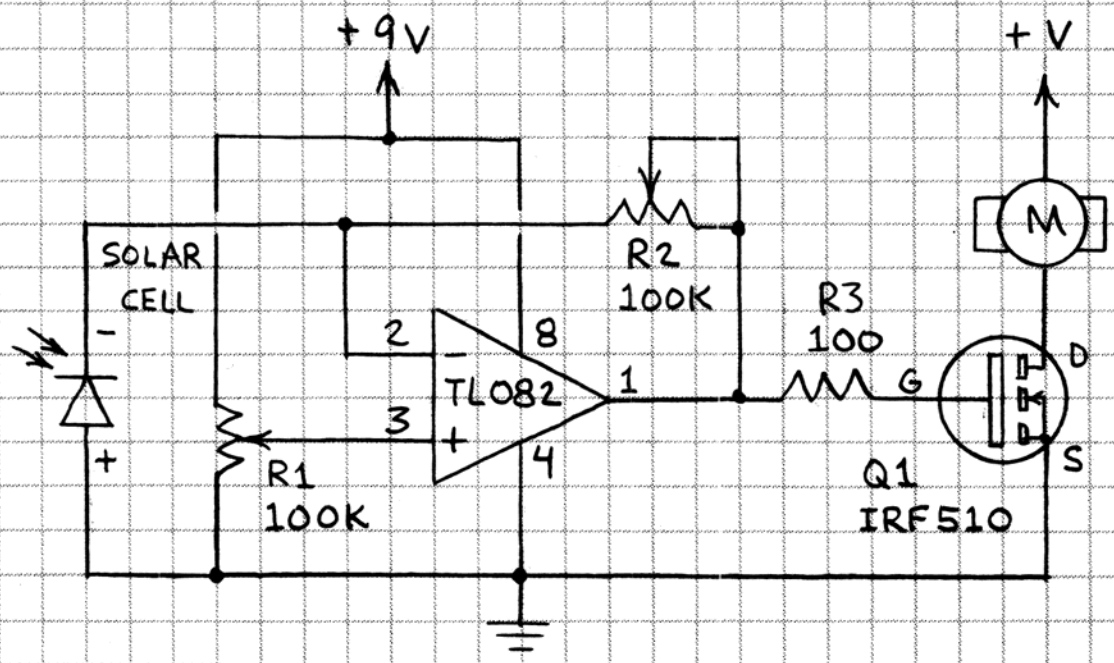

THIS CIRCUIT ALSO SWITCHES A SMALL DC MOTOR WITH AN IRF510 POWER MOSFET. ADDITIONAL FLEXIBILITY IS PROVIDED BY THE TL082 OP AMP. R1 CONTROLS THE SWITCHING THRESHOLD AND R2 CONTROLS THE GAIN. +V SHOULD NOT EXCEED THE MOTOR'S RATING.

SOLAR CELL LIGHT METERS

THE PHOTOCURRENT FROM A SILICON SOLAR CELL IS LINEAR WITH RESPECT TO LIGHT INTENSITY. THIS MEANS SOLAR CELLS MAKE EXCELLENT SENSORS FOR LIGHT METERS. THE APPLICATIONS SHOWN BELOW ARE FOR LIGHT METERS MADE FROM A SOLAR CELL AND A RADIOSHACK MULTITESTER.

LIGHT METER (VOLTAGE TYPE)

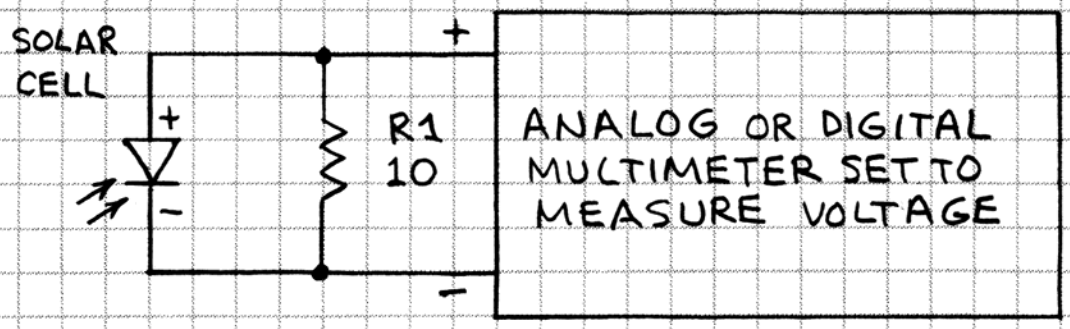

THE VOLTAGE PRODUCED BY A SOLAR CELL IS NOT LINEAR WITH RESPECT TO LIGHT INTENSITY. THIS ARRANGEMENT MEASURES THE PHOTOCURRENT (I_P) FROM A SOLAR CELL, WHICH IS LINEAR. FROM OHM'S LAW, THE CURRENT THROUGH A RESISTOR IS V/R. IF R1 IS 10 OHMS AND THE VOLTAGE ACROSS R1 IS 0.42 VOLT, THEN $I_P = 0.42 / 10$ OR 0.042 AMPERE (42 mA).

LIGHT METER (CURRENT TYPE)

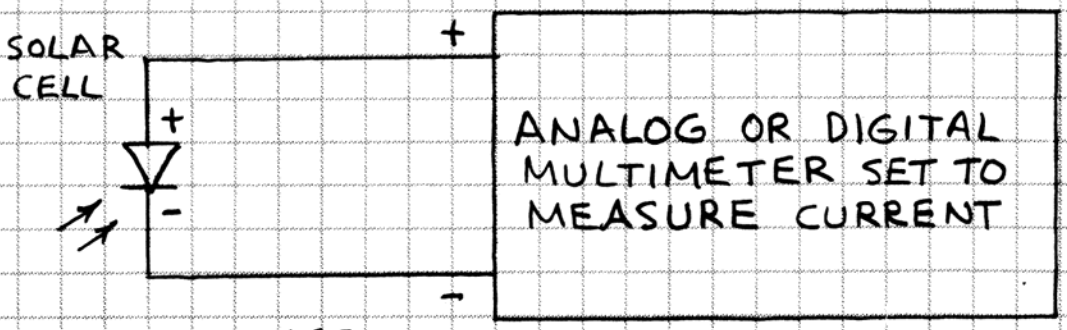

THIS ARRANGEMENT DIRECTLY MEASURES SOLAR CELL PHOTOCURRENT.

SOLAR CELL RADIOMETER

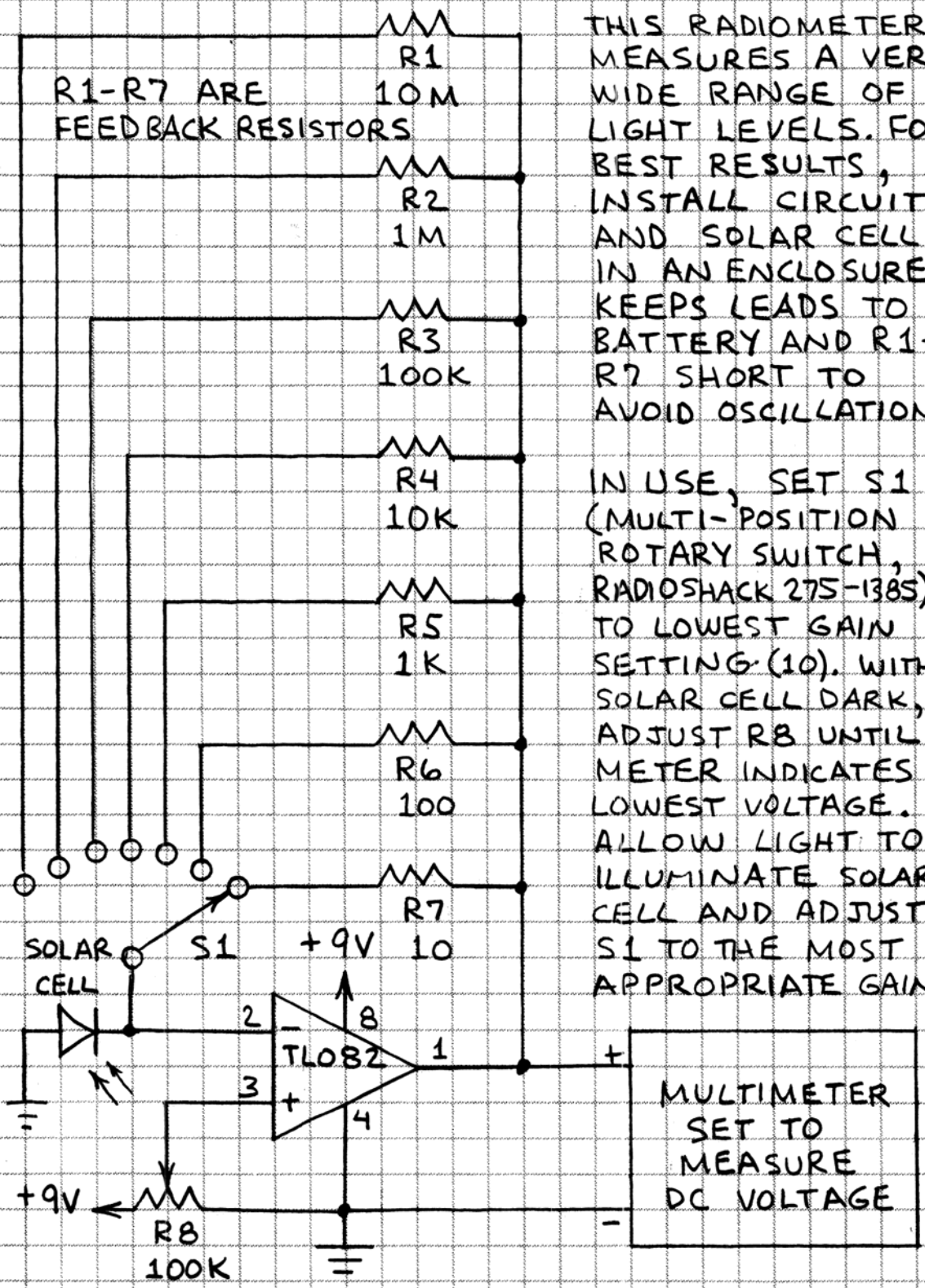

THIS RADIOMETER MEASURES A VERY WIDE RANGE OF LIGHT LEVELS. FOR BEST RESULTS, INSTALL CIRCUIT AND SOLAR CELL IN AN ENCLOSURE. KEEPS LEADS TO BATTERY AND R1-R7 SHORT TO AVOID OSCILLATION.

IN USE, SET S1 (MULTI-POSITION ROTARY SWITCH, RADIOSHACK 275-1385) TO LOWEST GAIN SETTING (10). WITH SOLAR CELL DARK, ADJUST R8 UNTIL METER INDICATES LOWEST VOLTAGE. ALLOW LIGHT TO ILLUMINATE SOLAR CELL AND ADJUST S1 TO THE MOST APPROPRIATE GAIN.

THE GAIN OF THE RADIOMETER EQUALS THE FEEDBACK RESISTANCE (R1-R7). THUS WHEN R4 IS SELECTED, THE RADIOMETER MULTIPLIES THE SOLAR CELL PHOTOCURRENT 10,000 TIMES.

SUNLIGHT ACTUATED RELAY

A SERIES ARRANGEMENT OF SILICON SOLAR CELLS WILL ACTIVATE A RELAY. THE SOLAR CELL ARRAY MUST PROVIDE SUFFICIENT VOLTAGE AND CURRENT TO OPERATE THE RELAY. THE ARRAY SHOWN HERE WILL PULL IN A LOW CURRENT RELAY WITH A 7-TO 9-VOLT COIL.

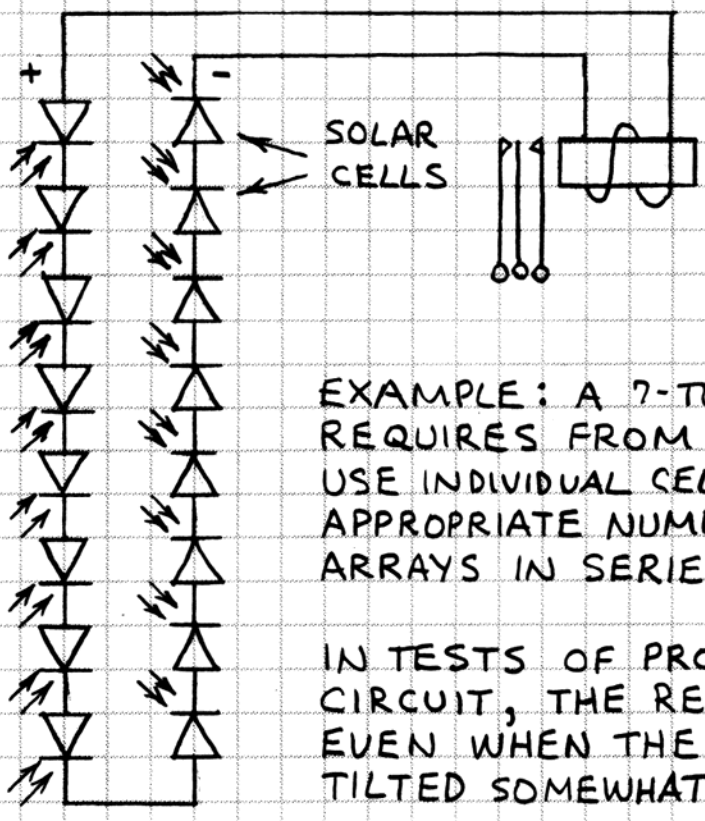

7-TO 9-VOLT LOW CURRENT RELAY (RADIOSHACK 275-005 OR SIMILAR)

EXAMPLE: A 7-TO 9-VOLT RELAY REQUIRES FROM 14 TO 18 CELLS. USE INDIVIDUAL CELLS OR CONNECT APPROPRIATE NUMBER OF SOLAR ARRAYS IN SERIES.

IN TESTS OF PROTOTYPE CIRCUIT, THE RELAY PULLED IN EVEN WHEN THE ARRAY WAS TILTED SOMEWHAT AWAY FROM SUN.

SENSITIVITY ADJUSTMENTS:

RELAY

BLOCK PART OF THE ARRAY WITH AN OPAQUE COVER TO REDUCE SENSITIVITY, OR...

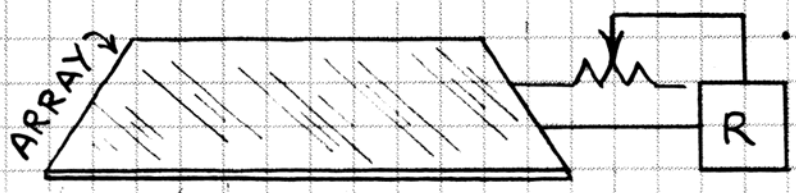

...USE 1K POTENTIOMETER RATED AT POWER OF ARRAY.

LIGHT ACTUATED RELAY

A SOLAR CELL GENERATES A PHOTOCURRENT WHEN ILLUMINATED. THE CIRCUIT SHOWN HERE AMPLIFIES THE CURRENT FROM A SINGLE SOLAR CELL AND DRIVES A RELAY. THIS CIRCUIT WILL WORK WITH A VERY SMALL SOLAR CELL AND WILL RESPOND TO VERY LOW LEVELS OF LIGHT.

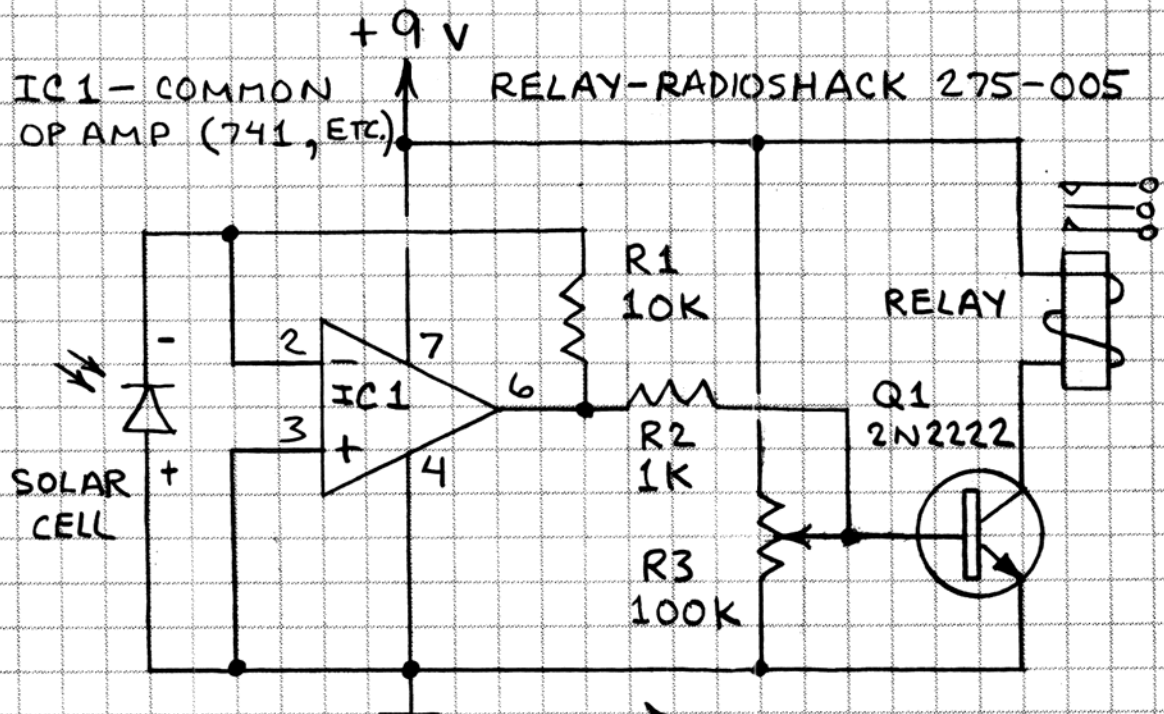

CONNECT THIS PAIR OF LEDS TO THE RELAY TERMINALS TO INDICATE THE CIRCUIT STATUS.

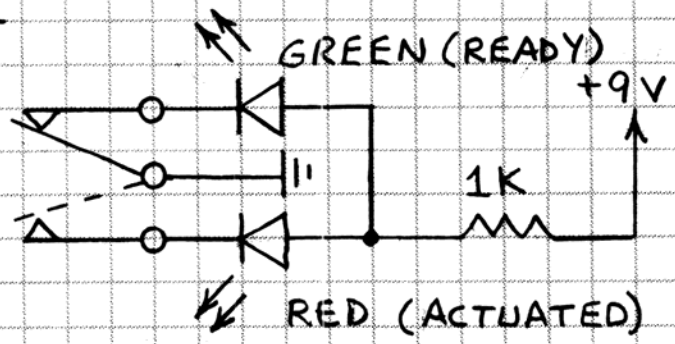

WITH ROOM LIGHTS SUBDUED, ADJUST R3 UNTIL THE RED LED JUST STOPS GLOWING AND THE GREEN LED GLOWS. LIGHT FROM A FLASHLIGHT WILL TRIGGER THE CIRCUIT AND THE RED LED WILL GLOW. THE CIRCUIT WILL RESPOND TO AN LED, MATCH, CANDLE, DAYLIGHT AND A LASER POINTER. SINCE THE CIRCUIT RESPONDS TO MANY LIGHT SOURCES, NEVER USE IT TO CONTROL HAZARDOUS THINGS (MACHINERY, ETC.).

BREAK-BEAM DETECTION SYSTEMS

BREAK-BEAM DETECTION SYSTEMS DETECT EVERYTHING FROM ITEMS ON A CONVEYOR BELT AND SMOKE TO CUSTOMERS IN STORES AND BURGLARS. WHEN A LIGHT BEAM IS INTERRUPTED, THE SYSTEM SWITCHES AN ALARM, COUNTER OR LIGHT. HERE ARE SOME COMMON BREAK-BEAM CONFIGURATIONS:

IN-LINE MODE

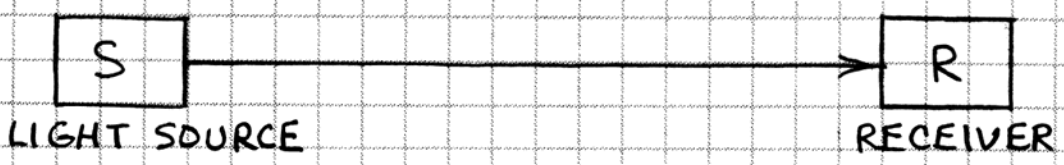

REFLECTION MODE

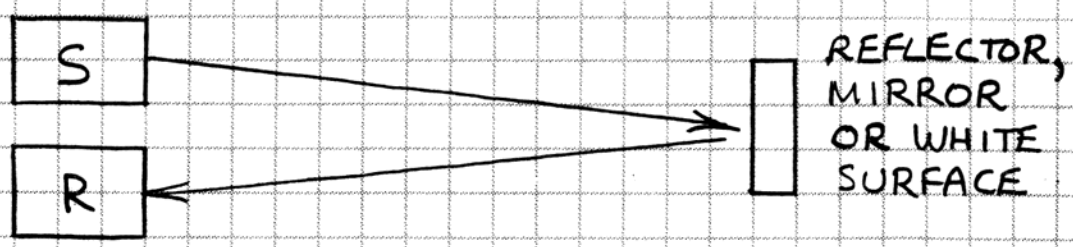

PROXIMITY MODE

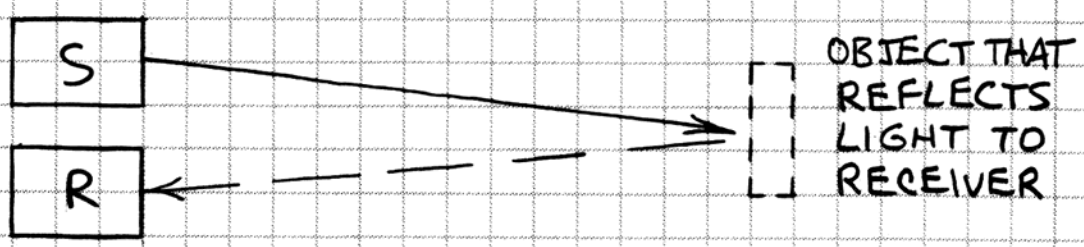

KINDS OF BREAK-BEAM SYSTEMS

STEADY STATE — THE LIGHT SOURCE IS A LAMP, LED OR SUNLIGHT. WHILE VERY SIMPLE, A STEADY-STATE SYSTEM CAN BE INTERFERED WITH BY AN OUTSIDE SOURCE.

PULSED — THE LIGHT IS A PULSED LED. A CAPACITOR BETWEEN THE SOLAR CELL AND THE RECEIVER BLOCKS INTERFERENCE FROM NON-PULSED OUTSIDE LIGHT SOURCES.

STEADY-STATE BREAK-BEAM SYSTEM

THIS SYSTEM PULLS IN A RELAY AND LIGHTS AN LED WHEN STEADY LIGHT ILLUMINATES THE SOLAR CELL.

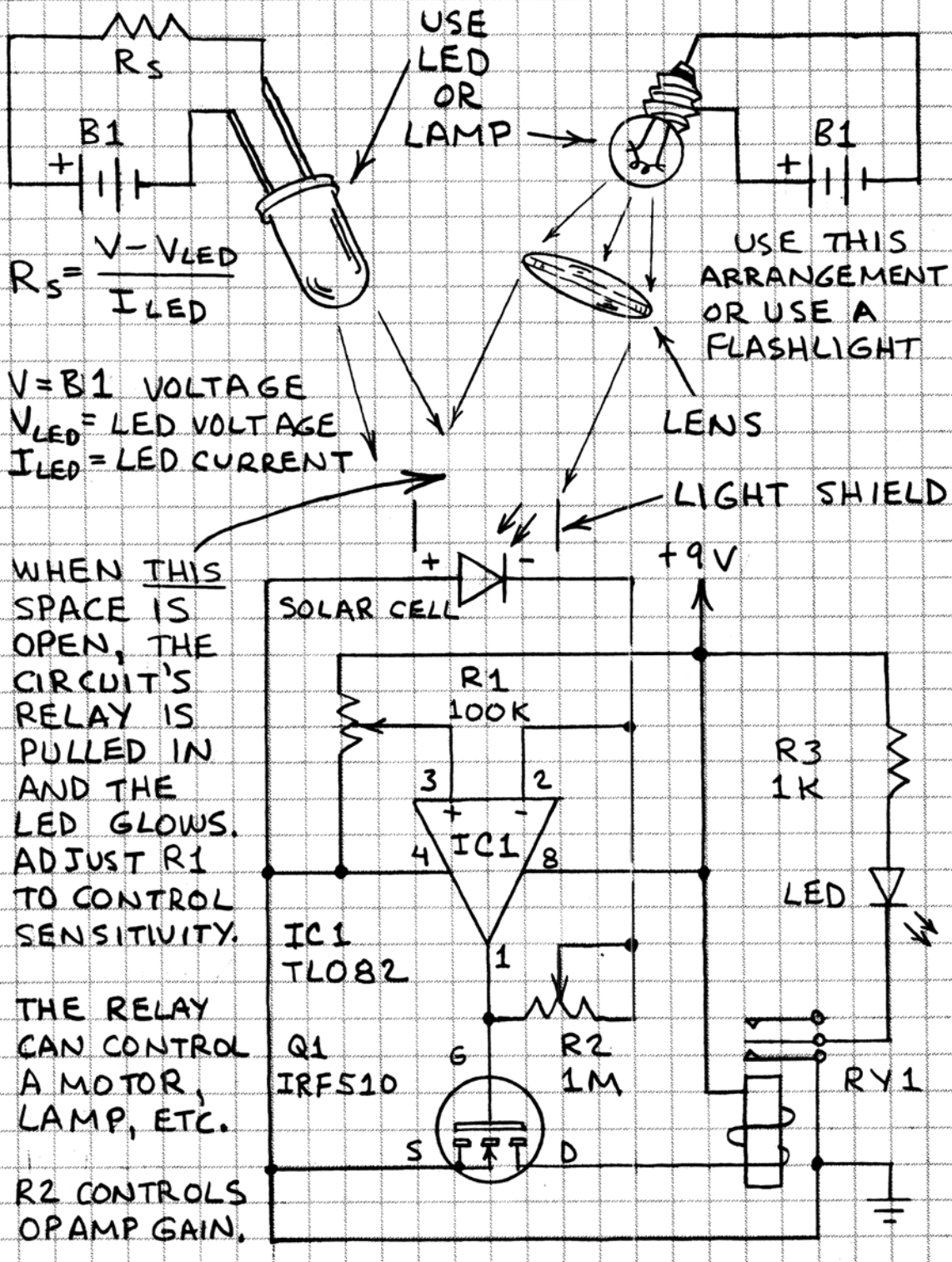

$$R_S = \frac{V - V_{LED}}{I_{LED}}$$

V = B1 VOLTAGE
V_{LED} = LED VOLTAGE
I_{LED} = LED CURRENT

WHEN THIS SPACE IS OPEN, THE CIRCUIT'S RELAY IS PULLED IN AND THE LED GLOWS. ADJUST R1 TO CONTROL SENSITIVITY.

THE RELAY CAN CONTROL A MOTOR, LAMP, ETC.

R2 CONTROLS OPAMP GAIN.

RY1 IS RADIOSHACK 275-005 OR SIMILAR LOW-CURRENT RELAY.

PULSED BREAK-BEAM SYSTEM

A PULSED BREAK-BEAM SYSTEM IS GENERALLY IMMUNE TO STEADY-STATE LIGHT SOURCES. THIS IS VERY IMPORTANT WHEN THE SYSTEM IS OPERATED IN THE PRESENCE OF ROOM LIGHTS OR WEAK SUNLIGHT. A SOLAR CELL RECEIVER FOR A PULSED BREAK-BEAM SYSTEM IS SHOWN ON THE FACING PAGE. SHOWN BELOW IS A 555 PULSED LED TRANSMITTER THAT WILL WORK WITH THIS RECEIVER.

PULSED BREAK-BEAM TRANSMITTER

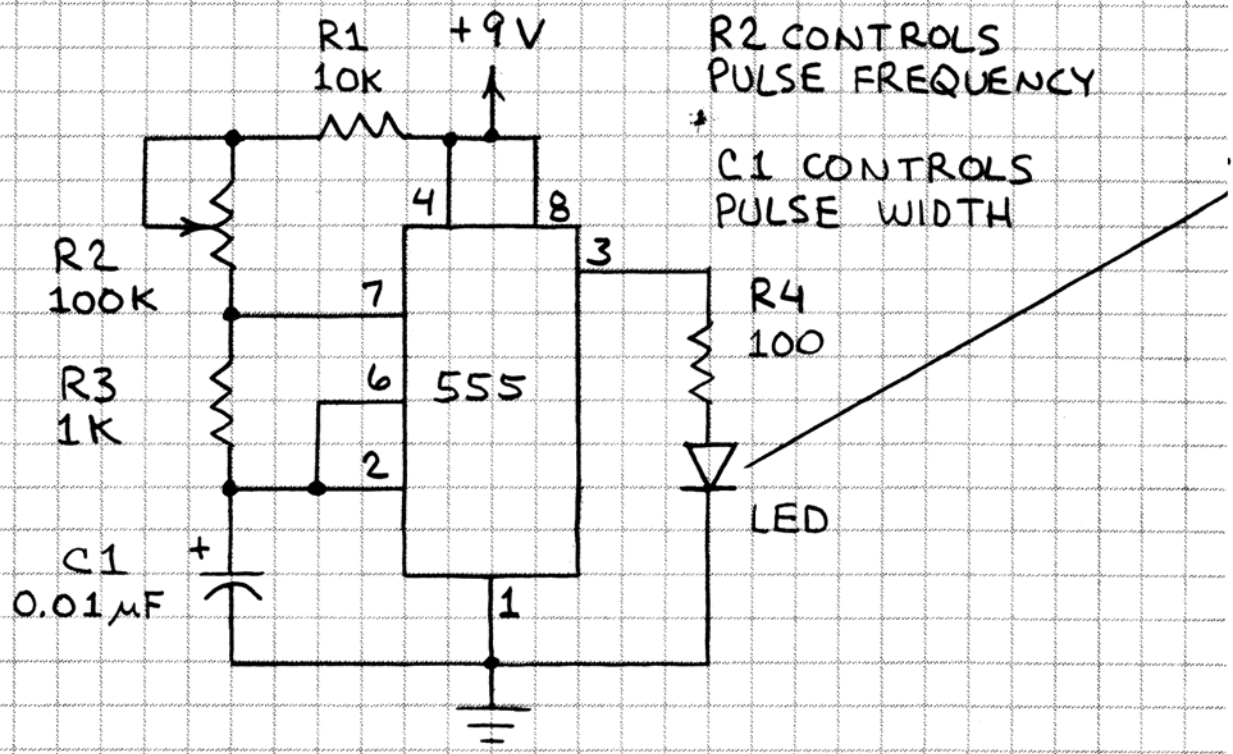

FOR BEST RESULTS:

1. USE AN INFRARED OR SUPER BRIGHT RED LED FOR MAXIMUM RANGE.

2. POWER THE TRANSMITTER AND RECEIVER FROM SEPARATE BATTERIES.

3. BE SURE THE BEAM FROM THE LED ILLUMINATES THE SOLAR CELL.

PULSED BREAK-BEAM RECEIVER

C1 BLOCKS THE SIGNAL FROM STEADY-STATE LIGHT SOURCES.

R1 CONTROLS THE GAIN OF OP AMP TL082. REDUCE R1 TO REDUCE THE GAIN.

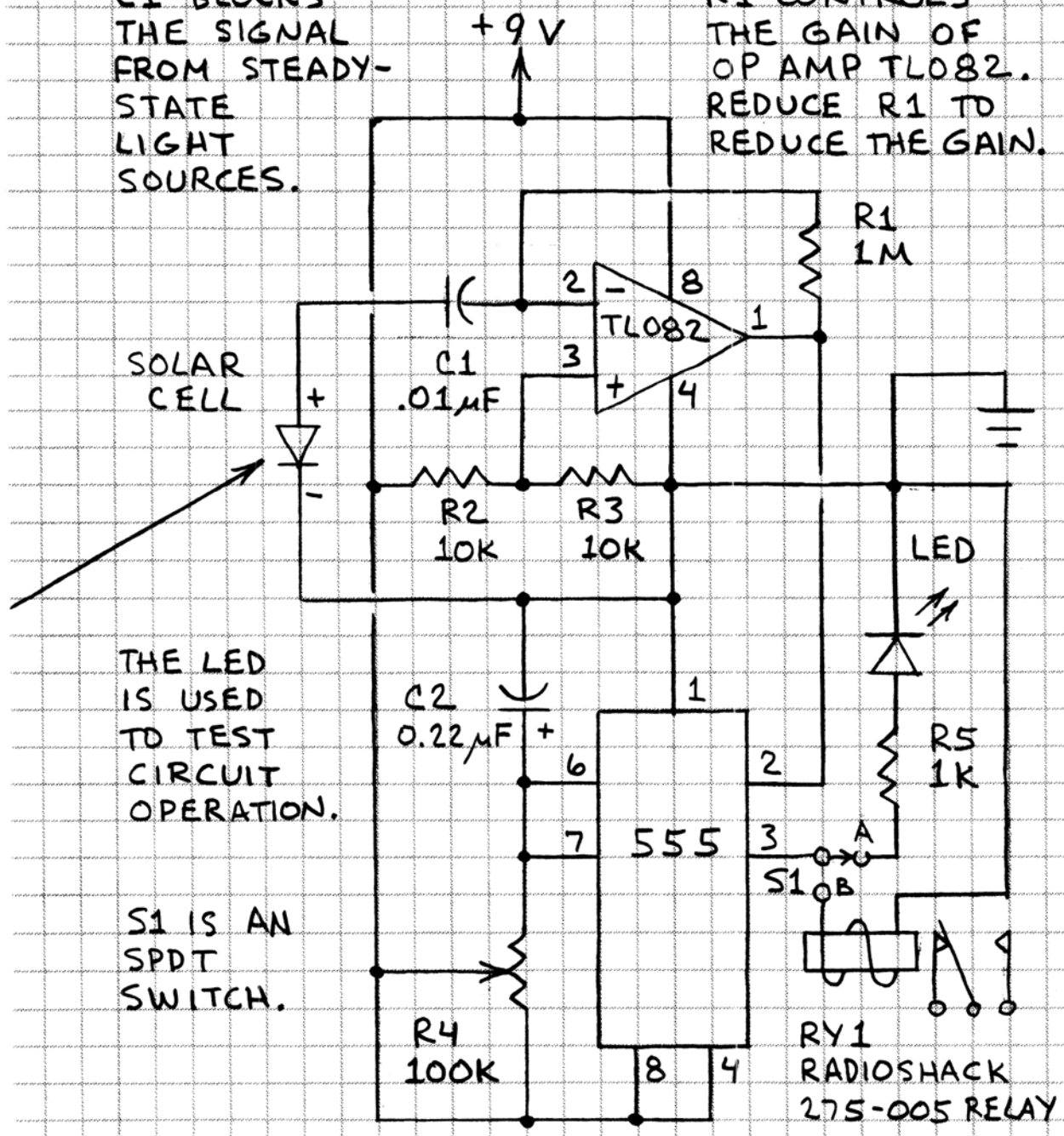

THE LED IS USED TO TEST CIRCUIT OPERATION.

S1 IS AN SPDT SWITCH.

TO OPERATE, SWITCH S1 TO POSITION A. ADJUST R2 OF THE TRANSMITTER TO ITS MID-POINT. WHEN LIGHT FROM THE LED IS STRIKING THE SOLAR CELL, ADJUST R4 OF THE RECEIVER UNTIL THE RECEIVER'S LED SWITCHES ON. THE LED SHOULD SWITCH OFF WHEN THE TRANSMITTER LED IS POINTED AWAY FROM THE SOLAR CELL OR ITS LIGHT IS BLOCKED. SWITCH S1 TO B TO SELECT RELAY.

SUN POWERED TONE GENERATORS

THE CIRCUITS ON THIS AND THE FACING PAGE ARE POWERED SOLELY BY SUNLIGHT OR A BRIGHT LAMP. MOST PRODUCE A TONE OR BUZZ. ONE GENERATES A SOUND THAT SOUNDS MUCH LIKE A TICKING CLOCK.

SOLAR POWERED PIEZO BUZZER

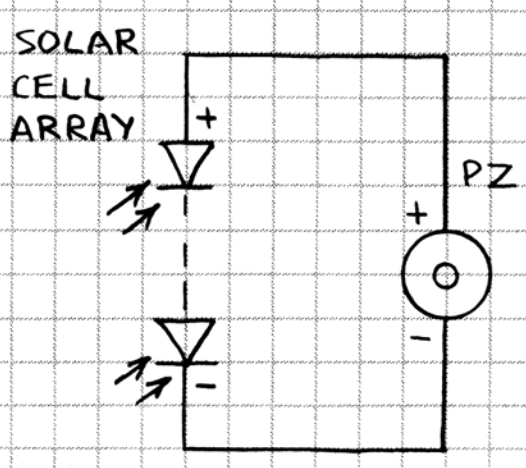

THE SOLAR ARRAY MUST PROVIDE SUFFICIENT VOLTAGE TO POWER THE PIEZO BUZZER. ANY PIEZO BUZZER CAN BE POWERED BY SUNLIGHT.

PZ IS A PIEZO BUZZER.

SOLAR POWERED DUAL-GATE OSCILLATOR

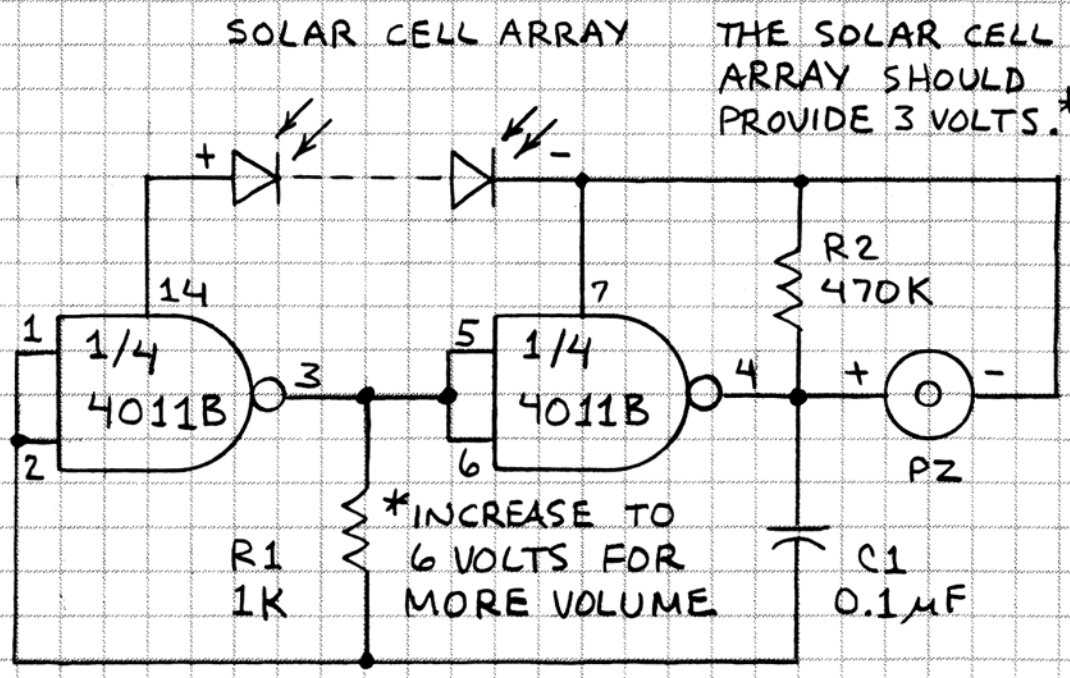

THE SOLAR CELL ARRAY SHOULD PROVIDE 3 VOLTS.*

EXPERIMENT WITH VALUE OF C1 AND R1 TO CHANGE FREQUENCY.

SOLAR POWERED 555 OSCILLATOR

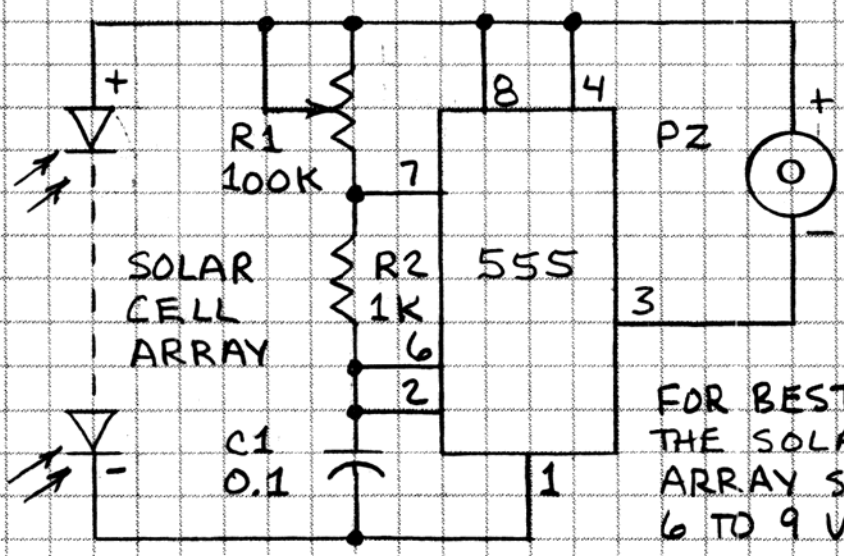

R1 CONTROLS FREQUENCY. PZ IS A PIEZO BUZZER OR SPEAKER ELEMENT.

FOR BEST RESULTS THE SOLAR CELL ARRAY SHOULD PROVIDE 6 TO 9 VOLTS.

SOLAR POWERED CLICKER (1)

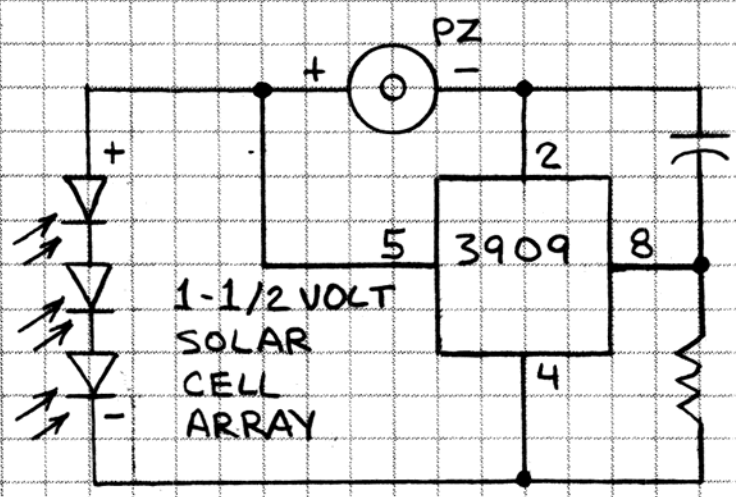

PZ IS A PIEZO BUZZER OR SPEAKER ELEMENT. REDUCE C1 TO INCREASE FREQUENCY.

SOLAR POWERED CLICKER (2)

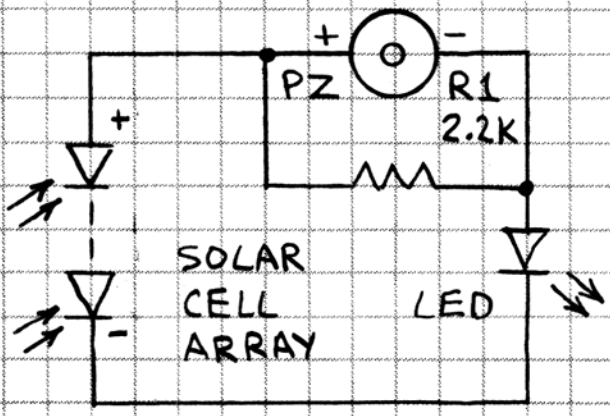

THIS CIRCUIT EMITS SOUND LIKE THAT OF A TICKING CLOCK. USE 3-VOLT SOLAR ARRAY. LED IS A BLINKING TYPE LED. OK TO REPLACE PZ WITH MAGNETIC SPEAKER.

LIGHT CONTROLLED TONE

SILICON SOLAR CELLS CAN BE USED IN MANY KINDS OF TONE GENERATORS THAT RESPOND TO DAYLIGHT OR ARTIFICIAL LIGHT.

LIGHT CONTROLLED 555 OSCILLATOR

THE FREQUENCY AND VOLUME OF SOUND PRODUCED BY A BASIC 555 OSCILLATOR CAN BE EASILY MODIFIED BY CONNECTING A SILICON SOLAR CELL AT VARIOUS POINTS.

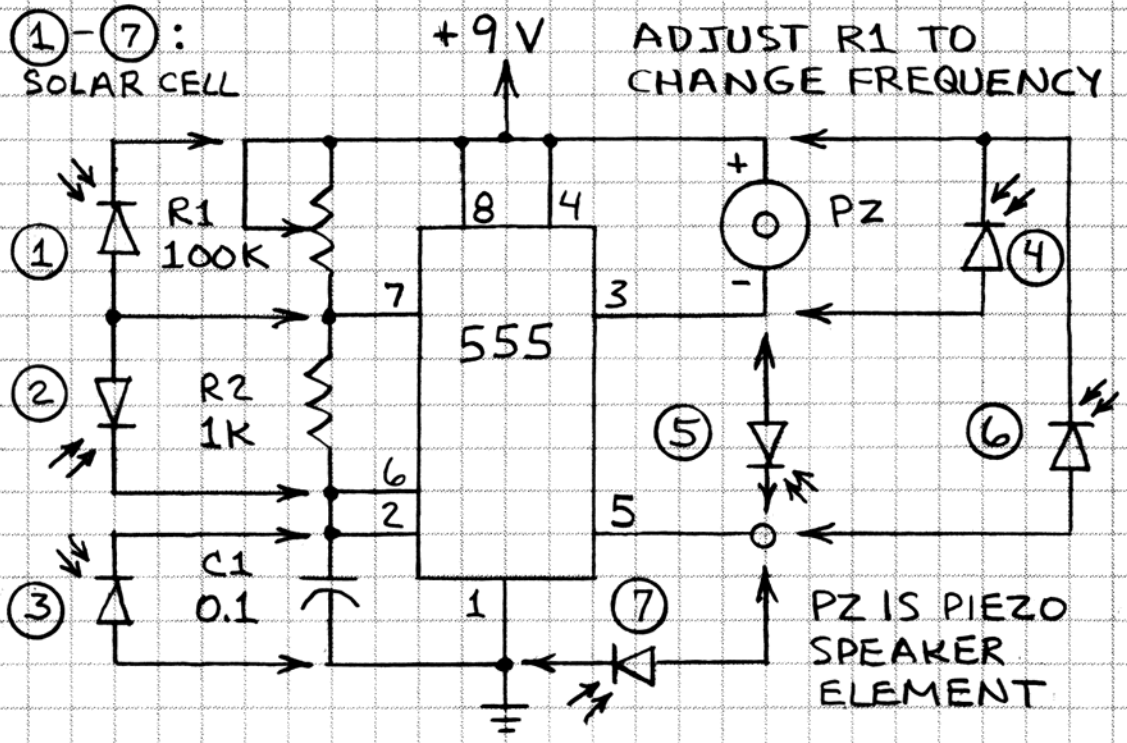

(1) CONNECT SOLAR CELL HERE. INCREASING LIGHT WILL INCREASE TONE FREQUENCY.
(2) WITH CELL CONNECTED HERE, INCREASING LIGHT REDUCES VOLUME FROM PZ.
(3) LIGHT FALLING ON CELL HERE REDUCES FREQUENCY OR CUTS OFF TONE ENTIRELY.
(4) LIGHT STRIKING CELL HERE REDUCES VOLUME FROM PZ OR CUTS OFF TONE.
(5) LIGHT FALLING ON CELL HERE CUTS OFF TONE OR CAUSES CHIRPS.
(6) LIGHT STRIKING CELL HERE REDUCES THE TONE FREQUENCY.

(7) WITH CELL HERE, INCREASING LIGHT INCREASES TONE FREQUENCY.

AN INTERESTING APPLICATION IS TO REPLACE C1 WITH A SOLAR CELL. SINCE A SOLAR CELL HAS CAPACITANCE, THE CIRCUIT WILL OSCILLATE. LIGHT AT THE CELL WILL CHANGE THE TONE FREQUENCY OR CUT IT OFF ENTIRELY. THE CELL SHOULD BE ORIENTED LIKE CELL (3).

HIGH GAIN LIGHT CONTROLLED TONE

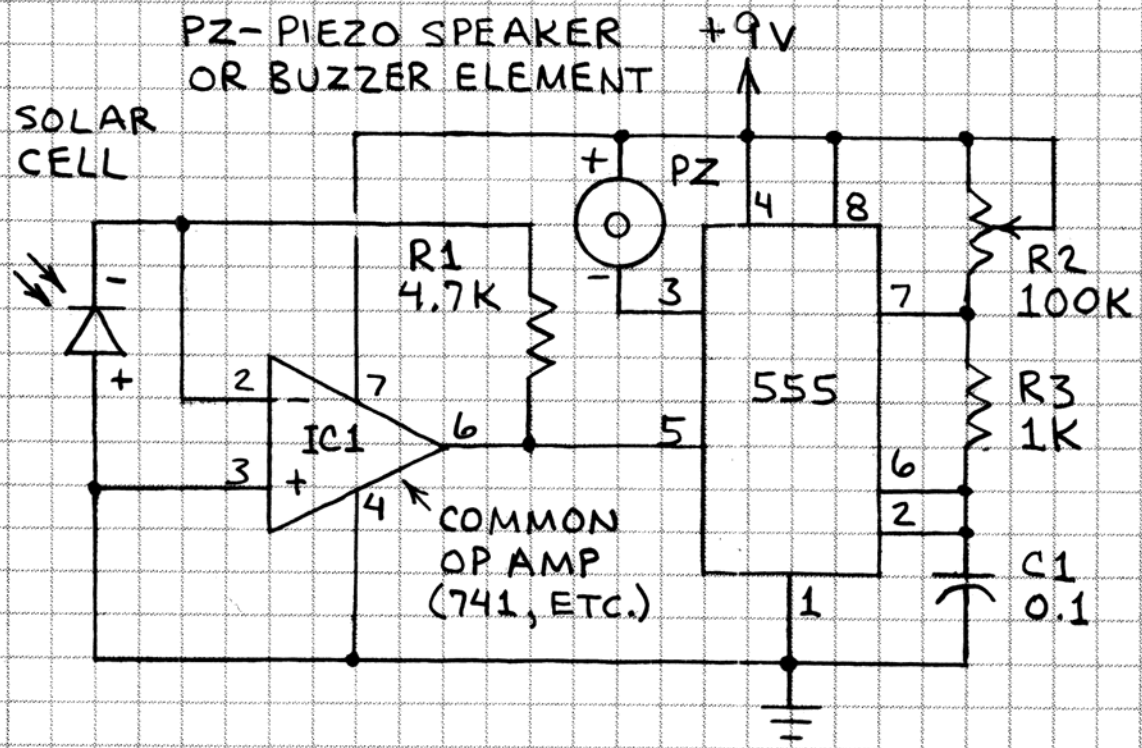

THE FREQUENCY OF THE TONE PRODUCED BY THIS CIRCUIT IS REDUCED AS THE INTENSITY OF LIGHT AT THE SOLAR CELL IS INCREASED. IN OPERATION, THE PHOTOCURRENT FROM THE SOLAR CELL IS AMPLIFIED AND CONVERTED TO A VOLTAGE BY OP AMP IC1. THIS VOLTAGE IS THEN APPLIED TO THE CONTROL INPUT OF A 555 IC CONNECTED AS AN OSCILLATOR. WHEN THE SOLAR CELL IS DARK, ADJUST R2 UNTIL THE DESIRED TONE IS PRODUCED. THEN ILLUMINATE THE SOLAR CELL. YOU CAN GET UNIQUE EFFECTS BY USING A FLASHING LIGHT.

IR REMOTE CONTROL TESTERS

NEAR-INFRARED EMITTING DIODES ARE USED IN REMOTE CONTROL TRANSMITTERS FOR TELEVISIONS, VIDEO RECORDERS AND OTHER SYSTEMS. THEY ARE ALSO USED TO TRANSMIT DATA FROM VARIOUS COMPUTERS. THE CIRCUITS SHOWN HERE VERIFY THAT NEAR-INFRARED TRANSMITTERS ARE OPERATING.

PIEZO ELEMENT TESTERS

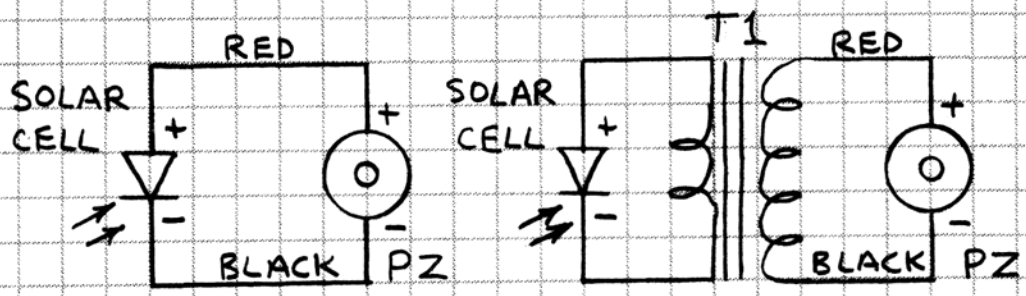

PZ IS ANY PIEZOELECTRIC SPEAKER ELEMENT OR EARPHONE. (DO NOT USE A PIEZOELECTRIC BUZZER.) T1 IN THE CIRCUIT ON THE RIGHT IS ANY MINIATURE AUDIO OUTPUT TRANSFORMER. THIS CIRCUIT PROVIDES A LOUDER SOUND THAN THE CIRCUIT ON THE LEFT. TEST THE IR REMOTE CONTROL TRANSMITTER BY POINTING IT AT THE SOLAR CELL. A TONE WILL BE HEARD IF THE UNIT IS WORKING.

MAGNETIC TRANSDUCER TESTERS

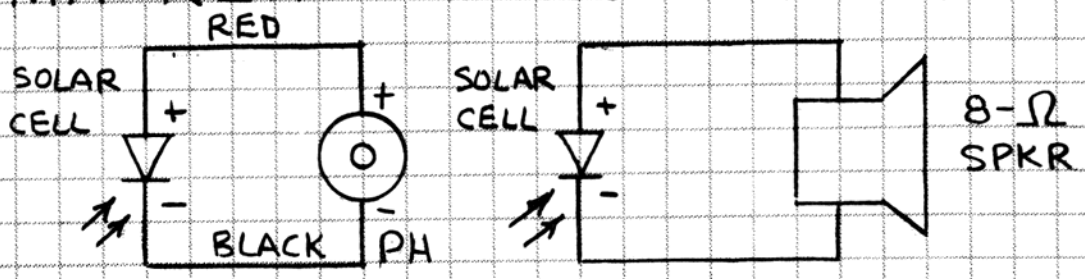

PH IS A MINIATURE MAGNETIC EAR PHONE. BOTH CIRCUITS EMIT A TONE WHEN A WORKING IR TRANSMITTER IS POINTED AT THE SOLAR CELL. USE A SOLAR ARRAY FOR MORE VOLUME.

TRANSISTOR REMOTE CONTROL TESTER

PZ IS A PIEZOELECTRIC SPEAKER ELEMENT OR EARPHONE. (DO NOT USE A PIEZOELECTRIC BUZZER.) POINT IR REMOTE CONTROL AT SOLAR CELL. PZ WILL EMIT TONE IF UNIT IS WORKING.

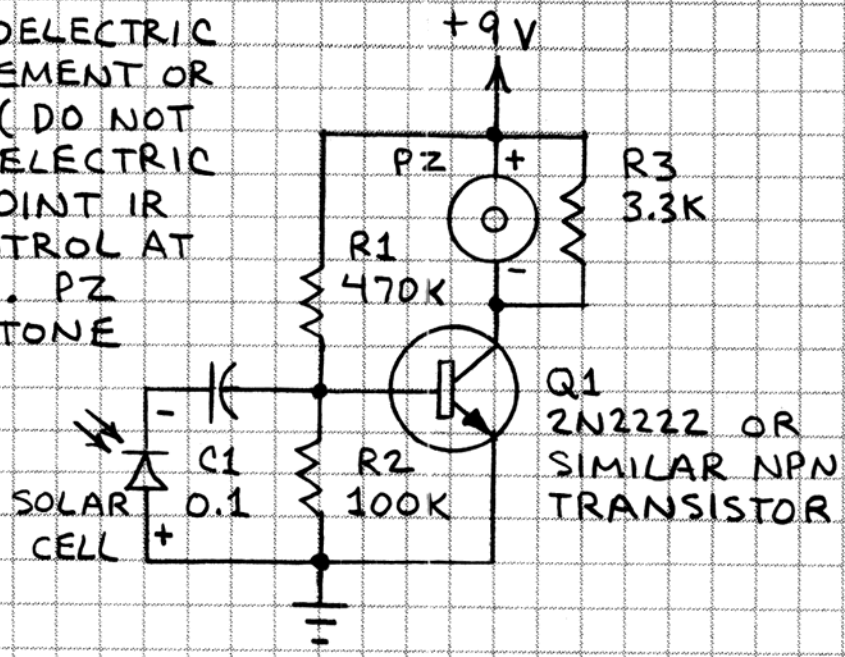

OP AMP REMOTE CONTROL TESTER

PZ IS A PIEZOELECTRIC SPEAKER ELEMENT. (DO NOT USE A PIEZO BUZZER.)

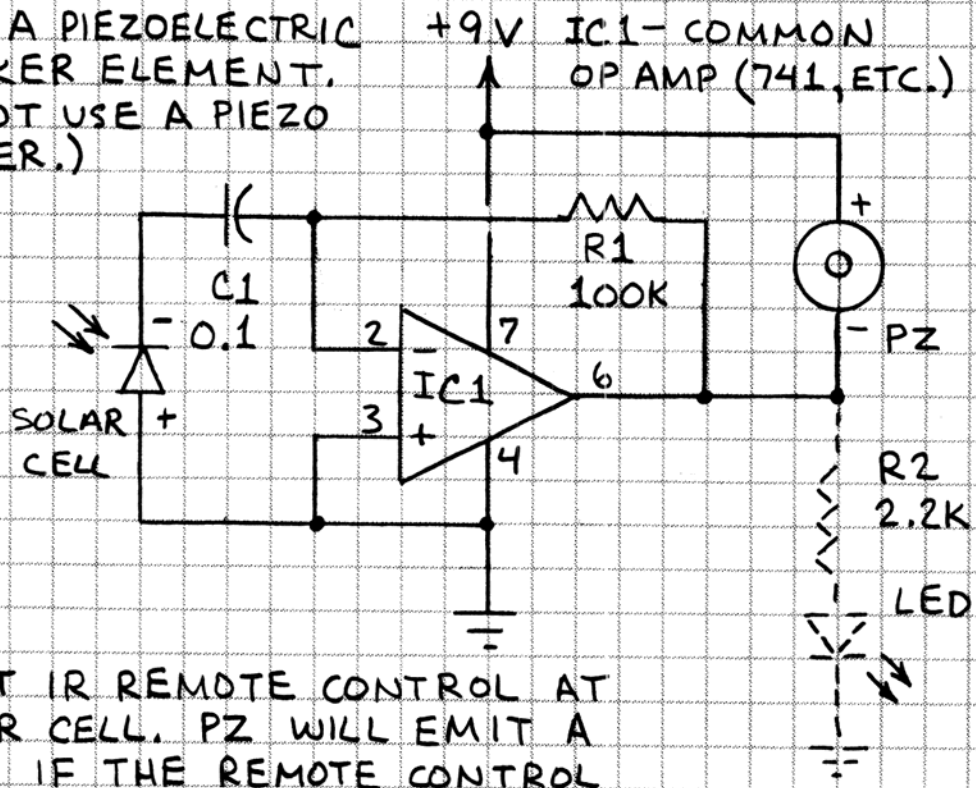

POINT IR REMOTE CONTROL AT SOLAR CELL. PZ WILL EMIT A TONE IF THE REMOTE CONTROL TRANSMITTER IS WORKING.
ADD R2 AND LED TO PROVIDE A VISUAL OUTPUT. THE LED WILL FLASH WHEN THE REMOTE CONTROL IS POINTED AT SOLAR CELL.

SOLAR-POWERED NIGHT LIGHT

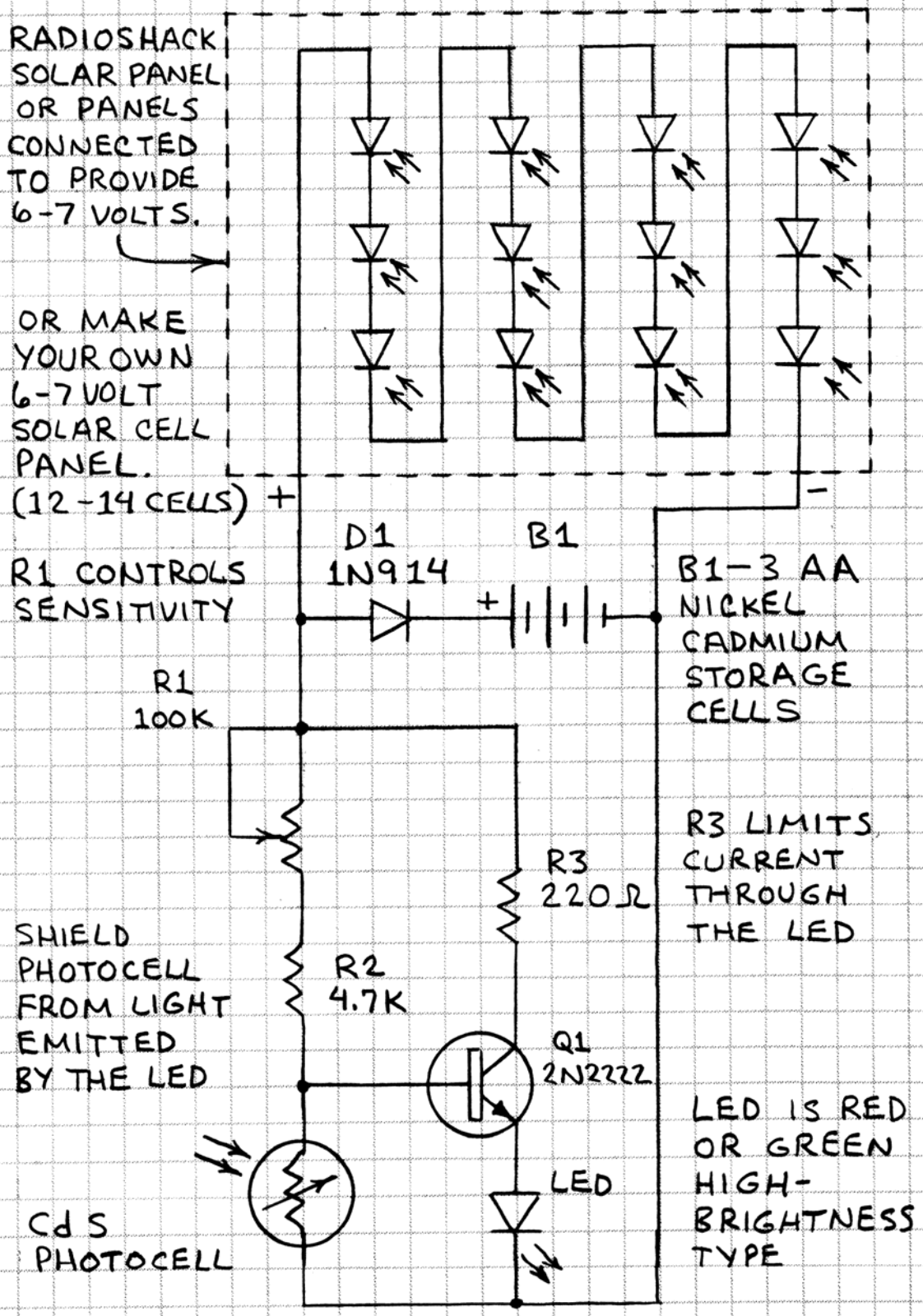

DURING DAYLIGHT HOURS THE SOLAR PANEL RECHARGES B1. AT NIGHT Q1 SWITCHES ON AND APPLIES CURRENT TO THE LED.

RESISTOR COLOR CODE

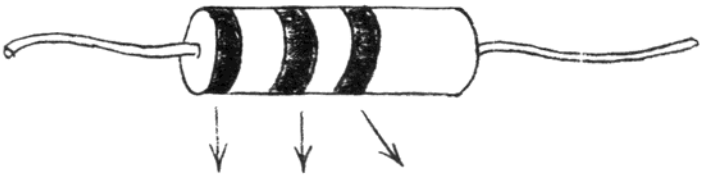

BLACK	0	0	× 1
BROWN	1	1	× 10
RED	2	2	× 100
ORANGE	3	3	× 1,000
YELLOW	4	4	× 10,000
GREEN	5	5	× 100,000
BLUE	6	6	× 1,000,000
VIOLET	7	7	× 10,000,000
GRAY	8	8	× 100,000,000
WHITE	9	9	—

FOURTH BAND INDICATES TOLERANCE (ACCURACY):
GOLD = ± 5 % SILVER = ± 10 % NONE = ± 20 %

OHM'S LAW:

$V = IR$ $R = V/I$
$I = V/R$ $P = VI = I^2R$

ABBREVIATIONS

A = AMPERE R = RESISTANCE
F = FARAD V (OR E) = VOLT
I = CURRENT W = WATT
P = POWER Ω = OHM

M (MEG-) = × 1,000,000
K (KILO-) = × 1,000
m (MILLI-) = .001
μ (MICRO-) = .000 001
n (NANO-) = .000 000 001
p (PICO-) = .000 000 000 001

The original goal of the Mini-Notebooks included in this volume of the Engineer's Mini-Notebook Collection was to provide science project ideas for students and hobbyists. They succeeded admirably, for these little books have stimulated many science fair projects. They have also been popular with hobbyists of all ages. Even professional scientists have recommended them.

The Mini-Notebooks in this volume are "Science Projects", "Environmental Projects" and "Communication Projects." Make a simple seismometer by hanging a magnet over a coil. Build a sun photometer to make accurate measurements of haze in the atmosphere. Study rain, lightning, clouds, sunlight, water, temperature and other topics. Build a wide variety of lightwave and radio communication circuits.

Forrest M. Mims III

Forrest M. Mims **III** has written dozens of books for RadioShack. He personally builds every circuit in his best-selling Engineer's Mini-Notebook series. He then uses a 0.7mm mechanical pencil to create pages for the finished book.

Building tiny instruments for model rockets, travel aids for the blind and high-power lasers is how Forrest got his start in electronics. When he's not writing RadioShack books, he writes magazine articles and teaches experimental science at the University of the Nations in Hawaii.

Forrest also does scientific studies of sunlight, the atmosphere, mosquitoes and bacteria using instruments he designs and makes. A simple instrument he developed to measure the ozone layer earned him a prestigious Rolex Award. NASA has sent Forrest and his instruments to several of the Western states and twice to Brazil to measure the effects of smoke from giant fires.

Forrest is a member of the Institute of Electrical and Electronics Engineers, the National Science Teachers Association and several scientific societies. He lives in Texas with his wife Minnie and their youngest daughter Sarah.

620-5033

0 40293 63773 6

Printed in USA